Hewlett Packard Enterprise

HPE ProLiant BL460c Gen9 Server Blade

User Guide

Abstract

This document is for the person who installs, administers, and troubleshoots servers and storage systems. Hewlett Packard Enterprise assumes you are qualified in the servicing of computer equipment and trained in recognizing hazards in products with hazardous energy levels.

Part Number: 768826-007
September 2018
Edition: 7

© Copyright 2014, 2018 Hewlett Packard Enterprise Development LP

The information contained herein is subject to change without notice. The only warranties for Hewlett Packard Enterprise products and services are set forth in the express warranty statements accompanying such products and services. Nothing herein should be construed as constituting an additional warranty. Hewlett Packard Enterprise shall not be liable for technical or editorial errors or omissions contained herein.

Linux® is the registered trademark of Linus Torvalds in the U.S. and other countries.

Microsoft® and Windows® are either registered trademarks or trademarks of Microsoft Corporation in the United States and/or other countries.

microSD is a trademark or a registered trademark of SD-3C in the United States, other countries or both.

Red Hat® is a registered trademark of Red Hat, Inc. in the United States and other countries.

VMware® is a registered trademark or a trademark of VMware, Inc. in the United States and/or other jurisdictions.

Contents

Component identification 6
Front panel components 6
Front panel LEDs and buttons 7
Front panel LED power fault codes 7
Serial label pull tab information 8
Drive numbering 8
Hot-plug drive LED definitions 9
NVMe SSD components 10
System board components 11
System maintenance switch 11
Mezzanine connector definitions 12
DIMM slot locations 12
SUV cable connectors 13
Operations 14
Power up the server blade 14
Power down the server blade 14
Remove the server blade 15
Remove the access panel 15
Install the access panel 16
Remove the DIMM baffles 16
Install the DIMM baffles 17
Remove the direct connect SATA cable 19
Install the direct connect SATA cable 19
Remove the mezzanine assembly 20
Remove the FlexibleLOM 20
Install the FlexibleLOM 21
Remove the storage controller/NVMe pass-through board 22
Remove a drive 23
Install the front panel/drive cage assembly 23
Remove the front panel/drive cage assembly 24
Setup 25
Overview 25
Installing an HPE BladeSystem c-Class enclosure 25
Preparing the enclosure 25
Installing server blade options 25
Installing interconnect modules 25
Interconnect bay numbering and device mapping 26
Connecting to the network 27
Install the server blade 28
Completing the configuration 29
Hardware options installation 30
Introduction 30
SAS/SATA drive option 30
NVMe SSD option 31
Storage controller/NVMe pass-through board options 32
Smart Storage Battery option 33
Mezzanine card option 35
M.2 enablement option 37
Installing a processor 38
Memory options 42
Memory-processor compatibility information 43
SmartMemory 45

Memory subsystem architecture....45
Single-, dual-, and quad-rank DIMMs....45
DIMM identification....46
Memory configurations....46
General DIMM slot population guidelines....47
Identifying the processor type....48
Installing a DIMM....49
HPE Trusted Platform Module option....50
Installing the Trusted Platform Module board....50
Retaining the recovery key/password....52
Enabling the Trusted Platform Module....52
Cabling....53
Cabling resources....53
HPE Smart Storage Battery cabling....53
Direct connect SATA cabling....53
Using the HPE c-Class Blade SUV Cable....54
Connecting locally to a server blade with video and USB devices....54
Accessing a server blade with local KVM....54
Accessing local media devices....55
Troubleshooting....56
Troubleshooting resources....56
Software and configuration utilities....57
Server mode....57
Product QuickSpecs....57
HPE iLO....57
Active Health System....57
iLO RESTful API support....58
Integrated Management Log....58
HPE Insight Remote Support....58
HPE iLO....59
Intelligent Provisioning....60
Insight Diagnostics....60
Erase Utility....60
Scripting Toolkit for Windows and Linux....61
Service Pack for ProLiant....61
Smart Update Manager....61
UEFI System Utilities....62
Using UEFI System Utilities....62
Flexible boot control....63
Restoring and customizing configuration settings....63
Secure Boot configuration....63
Embedded UEFI shell....64
Embedded Diagnostics option....64
iLO RESTful API support for UEFI....64
Re-entering the server serial number and product ID....64
Utilities and features....65
HPE Smart Storage Administrator....65
ROMPaq utility....65
Automatic Server Recovery....65
USB support....66
Redundant ROM support....66
Keeping the system current....67
Drivers....67
Software and firmware....67
Version control....67
Operating systems and virtualization software support for ProLiant servers....68
HPE Technology Service Portfolio....68
Change control and proactive notification....68

System battery replacement 70
Regulatory information 72
Safety and regulatory compliance 72
Belarus Kazakhstan Russia marking 72
Turkey RoHS material content declaration 73
Ukraine RoHS material content declaration 73
Warranty information 73
Electrostatic discharge 74
Preventing electrostatic discharge 74
Grounding methods to prevent electrostatic discharge 74
Specifications 75
Environmental specifications 75
Server blade specifications 75
Support and other resources 76
Accessing Hewlett Packard Enterprise Support 76
Information to collect 76
Accessing updates 76
Websites 76
Customer Self Repair 77
Remote support 84
Acronyms and abbreviations 85
Documentation feedback 87
Index 88

Component identification

Front panel components

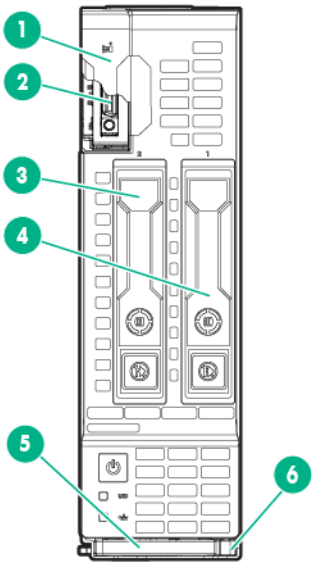

Item	Description
1	Serial label pull tab
2	HPE c-Class Blade SUV connector* (behind the serial label pull tab)
3	Drive bay 2
4	Drive bay 1
5	Server blade release lever
6	Server blade release button

*The SUV connector and the c-Class Blade SUV Cable are used for some server blade configuration and diagnostic procedures.

Front panel LEDs and buttons

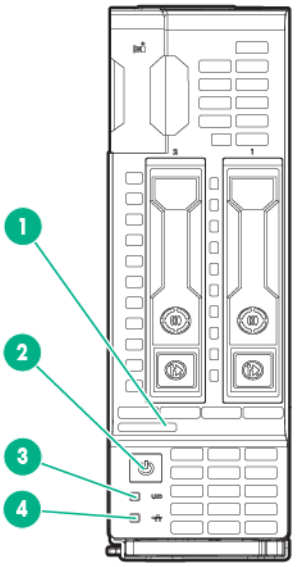

Item	Description	Status
1	Health LED	Solid green = Normal Flashing green (1 flash per second) = iLO is rebooting Flashing amber = System degraded Flashing red (1 flash per second) = System critical If the health LED indicates a degraded or critical state, review the system IML ("Integrated Management Log" on page 58) or use iLO ("HPE iLO" on page 57) to review the system health status.
2	Power On/Standby button and system power LED	Solid green = System on Flashing green (1 flash per second) = Performing power on sequence Solid amber = System in standby Off = No power present Facility power is not present, power cord is not attached, no power supplies are installed, power supply failure has occurred, or the front I/O cable is disconnected.
3	UID LED	Solid blue = Activated Flashing blue: • 1 flash per second = Remote management or firmware upgrade in progress • 4 flashes per second = iLO manual reboot sequence initiated • 8 flashes per second = iLO manual reboot sequence in progress Off = Deactivated
4	NIC status LED	Solid green = Link to network Flashing green (1 flash per second) = Network active Off = No network activity

When all four LEDs described in this table flash simultaneously, a power fault has occurred. For more information, see "Front panel LED power fault codes (on page 7)."

Front panel LED power fault codes

The following table provides a list of power fault codes, and the subsystems that are affected. Not all power faults are used by all server blades.

Subsystem	Front panel LED behavior
System board	1 flash
Processor	2 flashes
Memory	3 flashes
Riser board PCIe slots	4 flashes
FlexibleLOM	5 flashes
Removable HPE Flexible Smart Array controller/Smart SAS HBA controller	6 flashes
System board PCIe slots	7 flashes
Power backplane or storage backplane	8 flashes
Power supply	9 flashes

For more information, see "Front panel LEDs and buttons (on page 7)."

Serial label pull tab information

The serial label pull tab is located on the front panel of the server blade. To locate the serial label pull tab, see "Front panel components (on page 6)." The serial label pull tab provides the following information:

- Product serial number
- HPE iLO information
- QR code that points to mobile-friendly documentation

Drive numbering

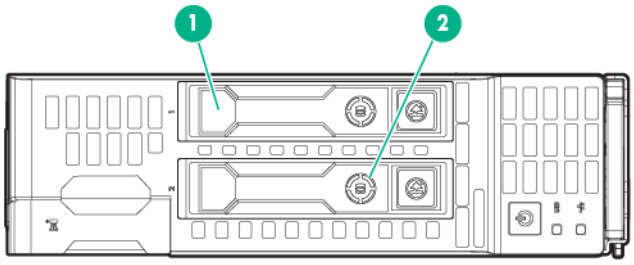

Item	Description
1	Drive bay 1
2	Drive bay 2

Hot-plug drive LED definitions

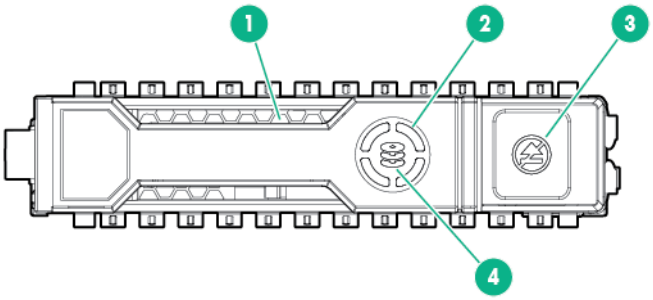

Item	LED	Status	Definition
1	Locate	Solid blue	The drive is being identified by a host application.
		Flashing blue	The drive carrier firmware is being updated or requires an update.
2	Activity ring	Rotating green	Drive activity
		Off	No drive activity
3	Do not remove	Solid white	Do not remove the drive. Removing the drive causes one or more of the logical drives to fail.
		Off	Removing the drive does not cause a logical drive to fail.
4	Drive status	Solid green	The drive is a member of one or more logical drives.
		Flashing green	The drive is rebuilding or performing a RAID migration, strip size migration, capacity expansion, or logical drive extension, or is erasing.
		Flashing amber/green	The drive is a member of one or more logical drives and predicts the drive will fail.
		Flashing amber	The drive is not configured and predicts the drive will fail.
		Solid amber	The drive has failed.
		Off	The drive is not configured by a RAID controller.

IMPORTANT: The Dynamic Smart Array B140i Controller is only available in UEFI Boot Mode. It cannot be enabled in Legacy BIOS Boot Mode. If the B140i controller is disabled, drives connected to the system board Mini-SAS connectors operate in AHCI or Legacy mode. Under this condition:

- The drives cannot be a part of a hardware RAID or a logical drive.
- The Locate, Drive status, and Do not remove LEDs of the affected drives are not controlled and will retain their last configured state. HPE SmartDrives preserve the last configured state across power cycles.

NVMe SSD components

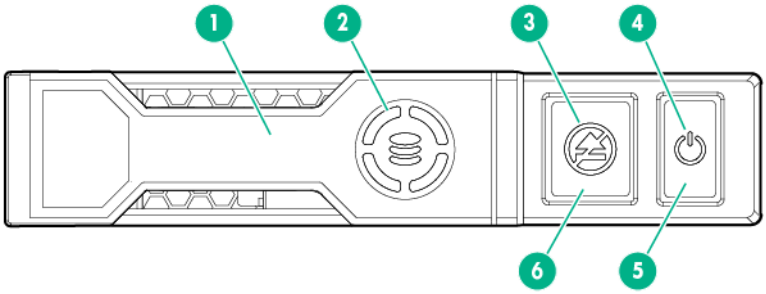

Item	Component	Status	Definition
1	Release lever	—	Ejects the NVMe drive carrier from the cage.
2	Activity ring LED	Rotating green Off	Drive activity No drive activity
3	Do Not Remove LED	Solid white Flashing white Off	Drive is powered on, and configured in system. Do not remove the drive. Ejection request pending. Do not remove the drive. Drive removed from the PCIe bus, and can be ejected.
4	Power LED	Solid green Flashing green Off	Drive is powered on, and configured in system. Do not remove the drive. Ejection request pending. Do not remove the drive. Drive removed from the PCIe bus, and can be ejected.
5	Power button	—	Momentary press to request drive removal from PCIe bus and ejection. Drive removal request can be denied by operating system.
6	Do Not Remove button	—	Releases the release lever for removal and insertion.

Upon NVMe SSD insertion, an LED initiation sequence will be visible - lighting each LED in the carrier in sequence from left to right. The sequence will cycle until the drive is recognized by the system. When the SSD is recognized by the system - the Do Not Remove LED will be solid white and the Power LED will be solid green.

System board components

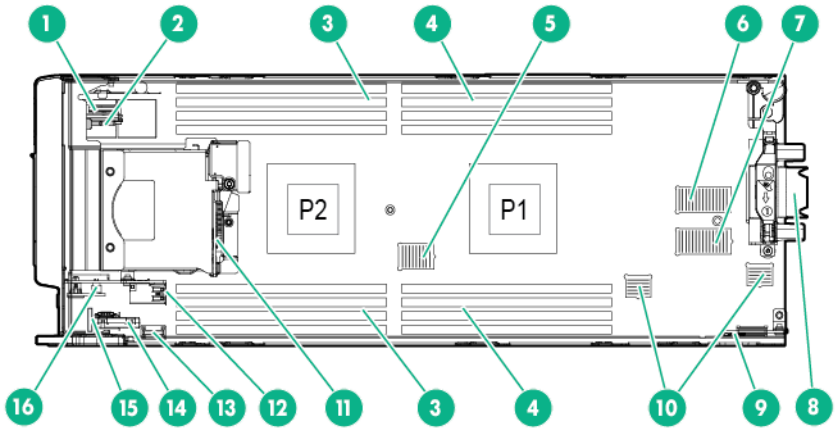

Item	Description
1	System battery
2	Solid state device connector (M.2)
3	Processor 2 DIMM slots (8)
4	Processor 1 DIMM slots (8)
5	SAS/SATA controller or NVMe pass-through board connector
6	Mezzanine connector 1 (Type A mezzanine only)
7	Mezzanine connector 2 (Type A or Type B mezzanine)
8	Enclosure connector
9	MicroSD card slot
10	FlexibleLOM connectors (2)
11	SAS/SATA or NVMe backplane
12	Internal USB 3.0 connector
13	Smart Storage Battery connector
14	Direct-connect SATA connector
15	System maintenance switch
16	TPM connector

System maintenance switch

Position	Default	Function
S1	Off	Off = iLO security is enabled. On = iLO security is disabled.
S2	Off	Off = System configuration can be changed. On = System configuration is locked.
S3	Off	Reserved
S4	Off	Reserved

Position	Default	Function
S5	Off	Off = Power-on password is enabled. On = Power-on password is disabled.
S6	Off	Off = No function. On = ROM reads system configuration as invalid.
S7	Off	Off = Set default boot mode to UEFI. On = Set default boot mode to legacy.
S8	—	Reserved
S9	Off	Off = BL460 On = WS460
S10	—	Reserved
S11	—	Reserved
S12	—	Reserved

You can access the redundant ROM by setting S1, S5, and S6 to On.

When the system maintenance switch position 6 is set to the On position, the system is prepared to erase all system configuration settings from both CMOS and NVRAM.

△ **CAUTION:** Clearing CMOS, NVRAM, or both deletes configuration information. Be sure to configure the server blade properly to prevent data loss.

Mezzanine connector definitions

Item	PCIe
Mezzanine connector 1	x16, Type A mezzanine card only
Mezzanine connector 2*	x16, Type A or B mezzanine card

*When installing a mezzanine option on mezzanine connector 2, processor 2 must be installed.

DIMM slot locations

DIMM slots are numbered sequentially (1 through 8) for each processor. The supported AMP modes use the alpha assignments for population order, and the slot numbers designate the DIMM slot ID for spare replacement.

The arrow points to the front of the server blade.

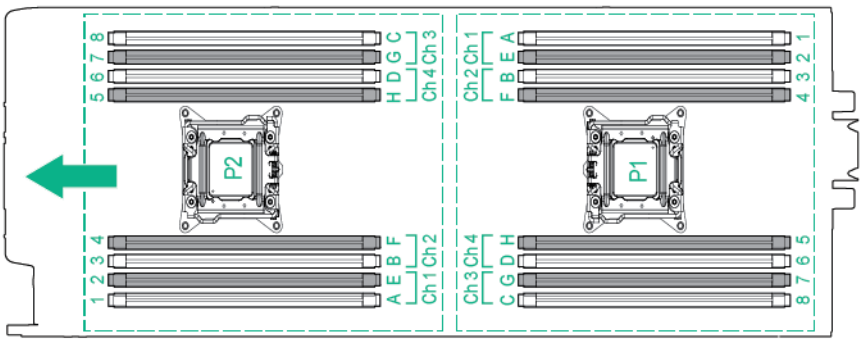

SUV cable connectors

CAUTION: Before disconnecting the SUV cable from the connector, always squeeze the release buttons on the sides of the connector. Failure to do so can result in damage to the equipment.

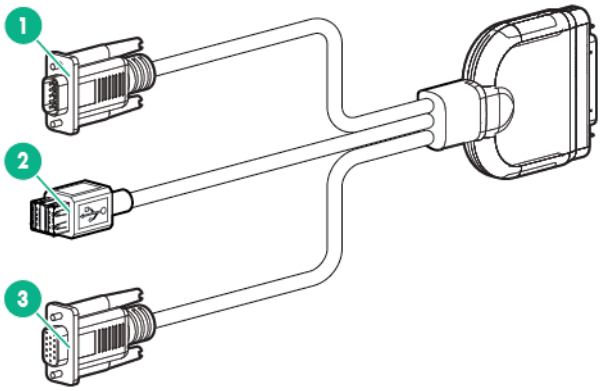

Item	Connector	Description
1	Serial	For trained personnel to connect a null modem serial cable and perform advanced diagnostic procedures
2	USB*	For connecting up to two USB devices
3	Video	For connecting a video monitor

*The USB connectors on the SUV cable do not support devices that require greater than a 500mA power source.

Operations

Power up the server blade

The Onboard Administrator initiates an automatic power-up sequence when the server blade is installed. If the default setting is changed, use one of the following methods to power up the server blade:

- Use a virtual power button selection through iLO.
- Press and release the Power On/Standby button.

When the server blade goes from the standby mode to the full power mode, the system power LED changes from amber to solid green. The health status LED bar flashes green when the Power On/Standby Button service is being initialized. For more information about the system power LED status, see "Front panel LEDs and buttons (on page 7)."

For more information about the Onboard Administrator, see the enclosure setup and installation guide on the Hewlett Packard Enterprise website (**http://www.hpe.com/support/BladeSystem-Enclosures-docs**).

For more information about iLO, see "HPE iLO (on page 57)."

Power down the server blade

Before powering down the server blade for any upgrade or maintenance procedures, perform a backup of critical server data and programs.

IMPORTANT: When the server blade is in standby mode, auxiliary power is still being provided to the system.

Depending on the Onboard Administrator configuration, use one of the following methods to power down the server blade:

- Press and release the Power On/Standby button.

  This method initiates a controlled shutdown of applications and the OS before the server blade enters standby mode.
- Press and hold the Power On/Standby button for more than 4 seconds to force the server blade to enter standby mode.

  This method forces the server blade to enter standby mode without properly exiting applications and the OS. If an application stops responding, you can use this method to force a shutdown.
- Use a virtual power button selection through iLO.

  This method initiates a controlled remote shutdown of applications and the OS before the server blade enters standby mode.
- Use the Onboard Administrator CLI to execute one of the following commands:
  - `poweroff server [bay number]`

    This command initiates a controlled shutdown of applications and the OS before the server blade enters standby mode.
  - `poweroff server [bay number] force`

    This form of the command forces the server blade to enter standby mode without properly exiting applications and the OS. If an application stops responding, this method forces a shutdown.

- Use the Onboard Administrator GUI to initiate a shutdown:
  a. Select the **Enclosure Information** tab.
  b. In the Device Bays item, select the **Overall** checkbox.
  c. From the Virtual Power menu, initiate a shutdown of applications and the OS:
     — For a controlled shutdown, select **Momentary Press**.
     — For an emergency shutdown, select **Press and Hold**.

Before proceeding, verify that the server blade is in standby mode by observing that the system power LED is amber.

Remove the server blade

1. Identify the proper server blade.
2. Power down the server blade (on page 14).
3. Remove the server blade.

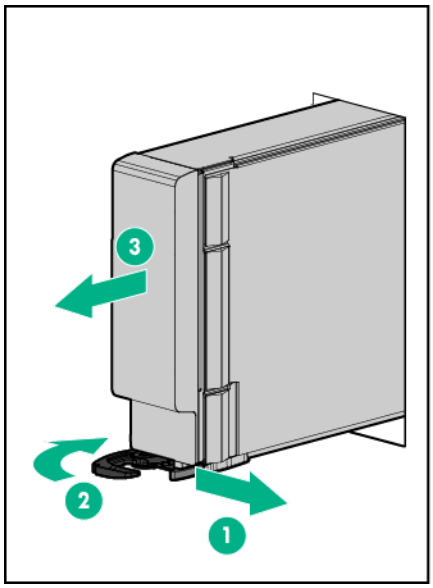

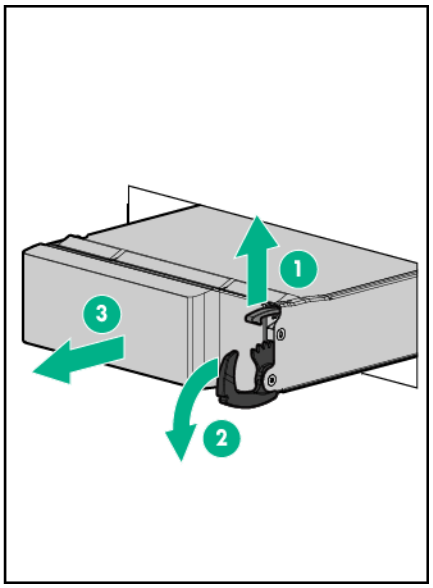

4. Place the server blade on a flat, level work surface.

WARNING: To reduce the risk of personal injury from hot surfaces, allow the drives and the internal system components to cool before touching them.

CAUTION: To prevent damage to electrical components, properly ground the server blade before beginning any installation procedure. Improper grounding can cause ESD.

Remove the access panel

To remove the component:

1. Power down the server blade (on page 14).
2. Remove the server blade (on page 15).
3. Place the server blade on a flat, level work surface.
4. Press the access panel release button.

5. Slide the access panel towards the rear of the server blade, and then lift to remove the panel.

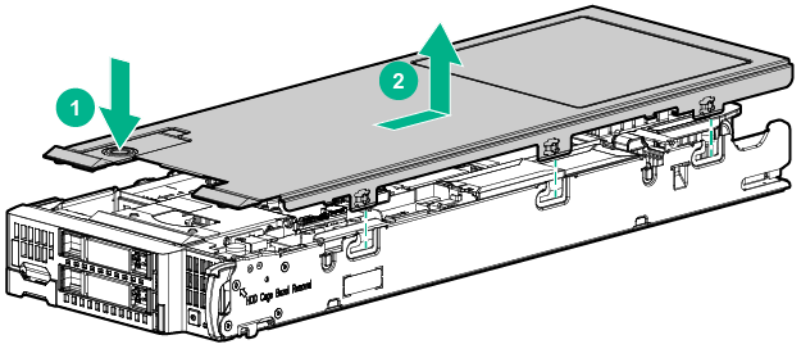

Install the access panel

1. Place the access panel on top of the server blade.
2. Slide the access panel forward until it clicks into place.

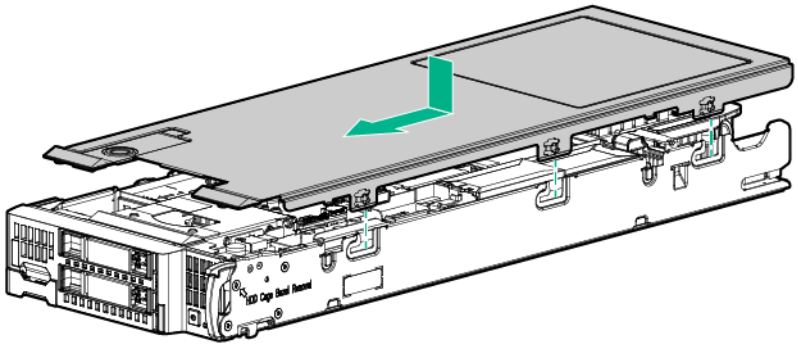

Remove the DIMM baffles

The server contains two DIMM baffles.

1. Power down the server blade (on page 14).
2. Remove the server blade (on page 15).
3. Place the server blade on a flat, level work surface.
4. Remove the access panel (on page 15).
5. If installed, remove the direct connect SATA cable ("Remove the direct connect SATA cable" on page 19).
6. If installed, remove the internal USB drive. To locate the internal USB connector, see "System board components (on page 11)."

IMPORTANT: When removing the right DIMM baffle, leave the Smart Storage Battery installed on the baffle. Use the blue pull tab to disconnect the Smart Storage Battery cable from the system board.

7. Remove one or more DIMM baffles:

- DIMM baffle (right side)

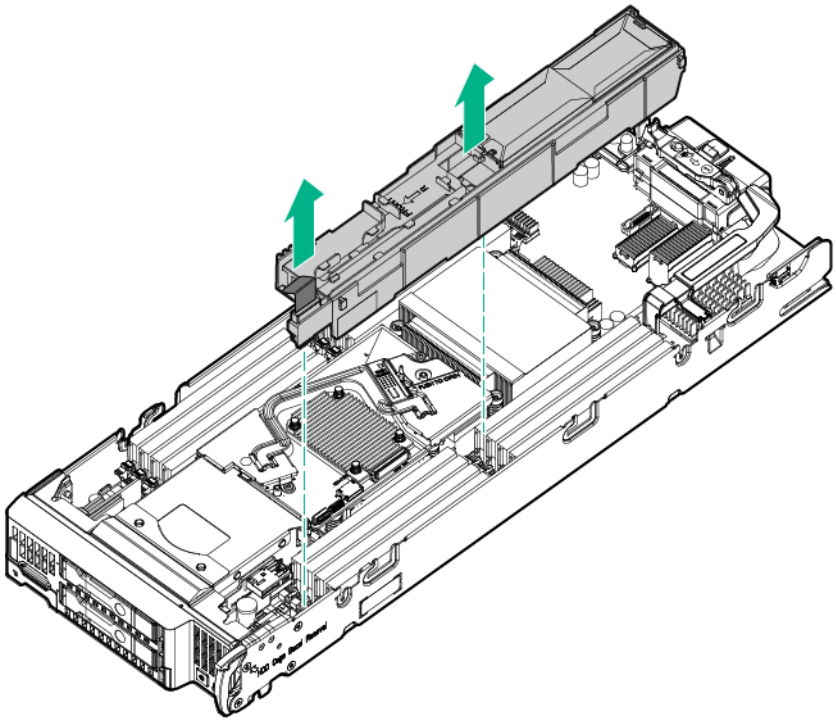

- DIMM baffle (left side)

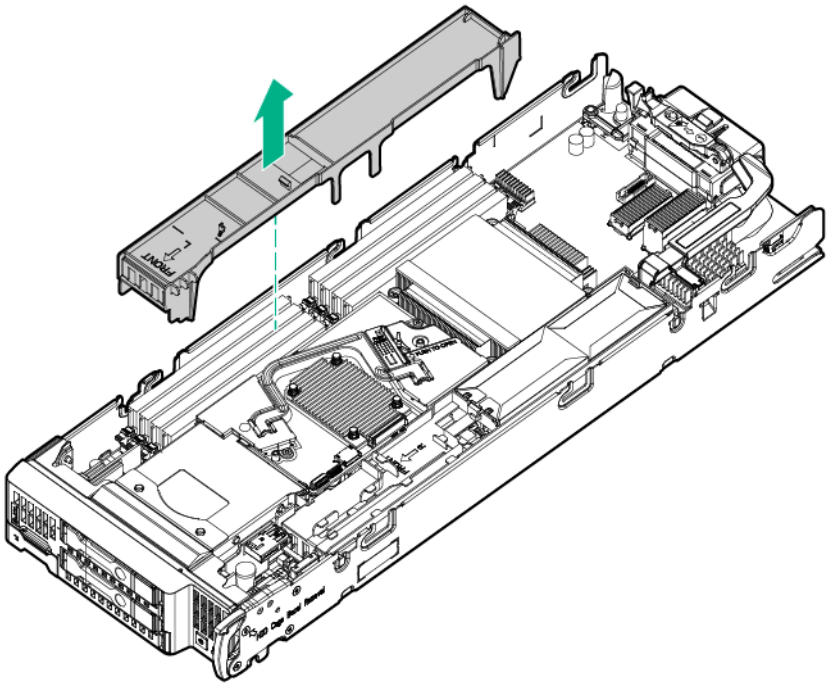

Install the DIMM baffles

The server contains two DIMM baffles.

1. Power down the server blade (on page 14).
2. Remove the server blade (on page 15).
3. Place the server blade on a flat, level work surface.

4. Remove the access panel (on page 15).
5. Install the DIMM baffle.
   - DIMM baffle (right side)

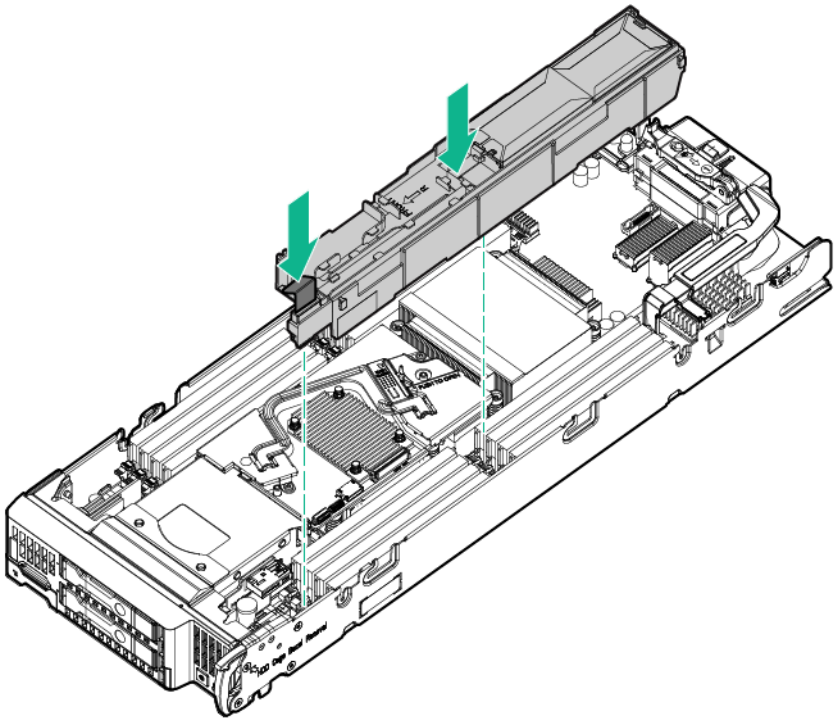

   - DIMM baffle (left side)

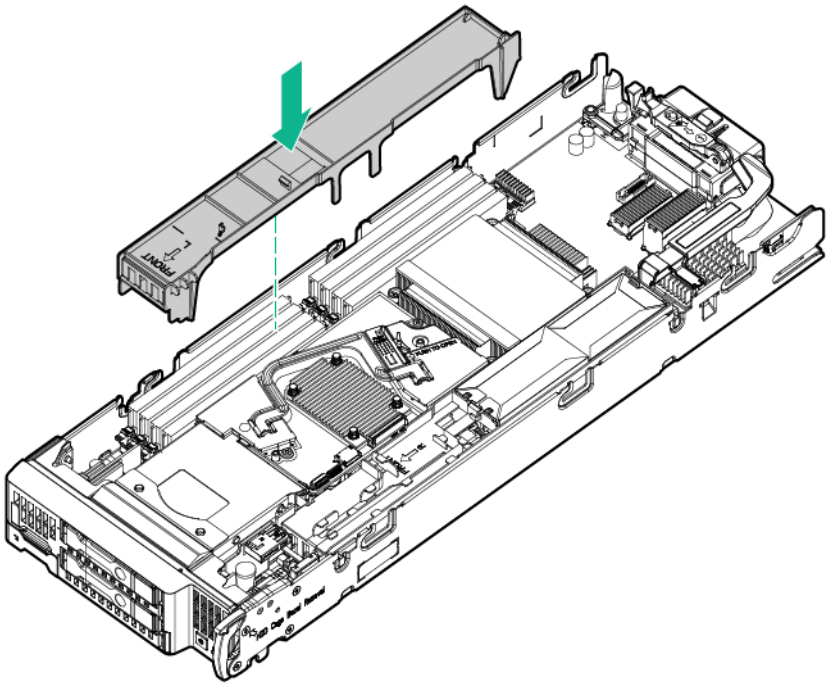

6. Install the access panel (on page 16).
7. Install the server blade (on page 28).
8. Power up the server blade (on page 14).

Remove the direct connect SATA cable

1. Power down the server blade (on page 14).
2. Remove the server blade (on page 15).
3. Place the server blade on a flat, level work surface.
4. Remove the access panel (on page 15).
5. Remove the direct connect SATA cable.
   a. Press in the latch on the connector.
   b. Disconnect the connector from the system board.
   c. Loosen the captive screw.
   d. Disconnect the other end of the cable from the drive backplane.
   e. Release the cable from the DIMM baffle.

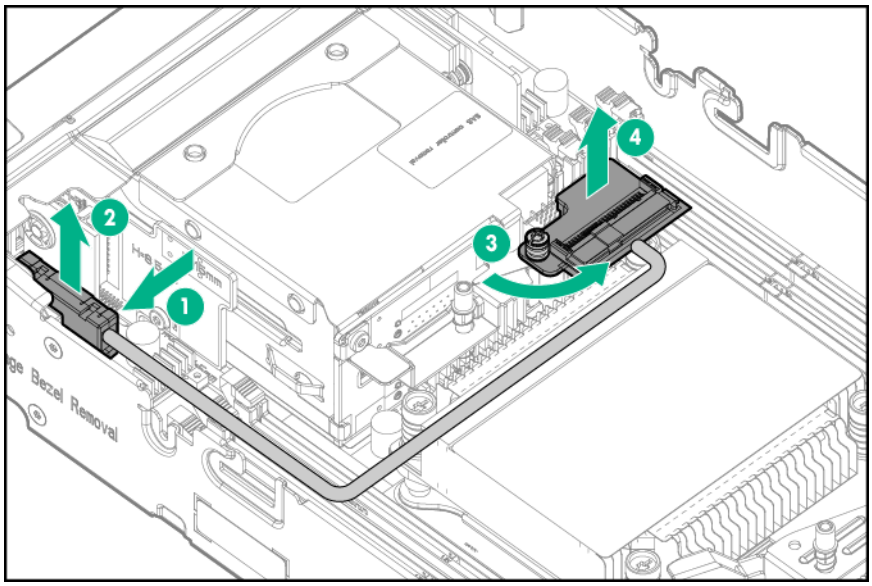

Install the direct connect SATA cable

1. Power down the server blade (on page 14).
2. Remove the server blade (on page 15).
3. Place the server blade on a flat, level work surface.
4. Remove the access panel (on page 15).
5. Install the direct connect SATA cable.
   a. Connect the direct connect SATA cable to the drive cage backplane.
   b. Secure the captive screw.
   c. Connect the other end of the cable to the system board.

d. Route and secure the cable onto the right DIMM baffle.

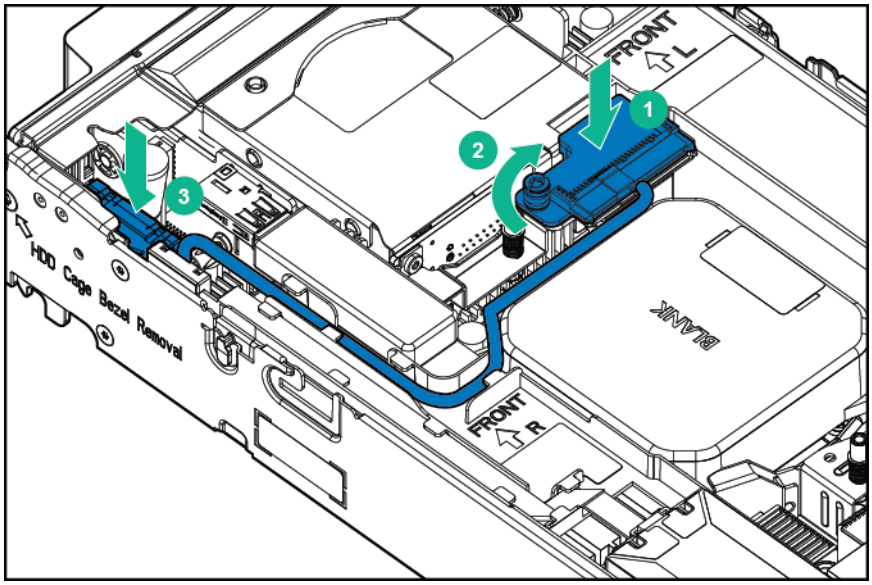

Remove the mezzanine assembly

1. Power down the server blade (on page 14).
2. Remove the server blade (on page 15).
3. Place the server blade on a flat, level work surface.
4. Remove the access panel (on page 15).
5. Remove the mezzanine assembly.

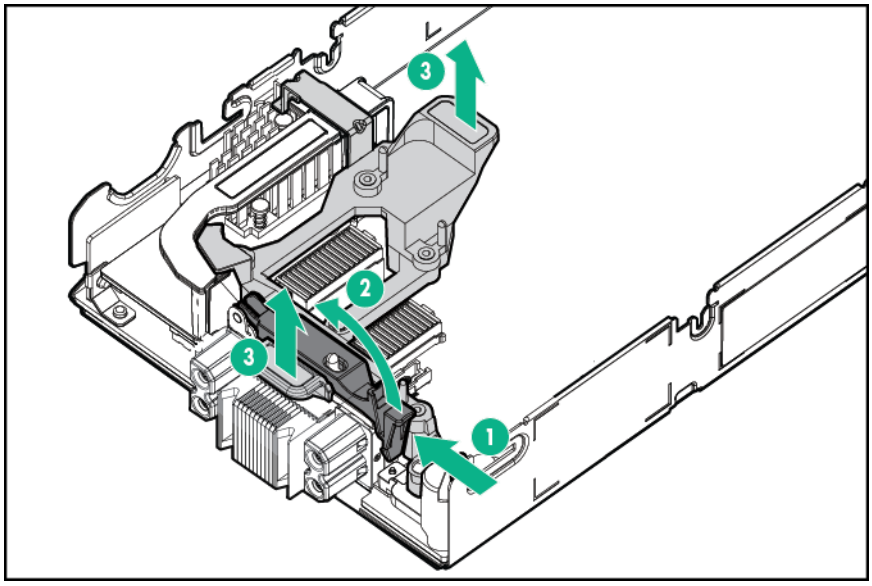

Remove the FlexibleLOM

1. Power down the server blade (on page 14).
2. Remove the server blade (on page 15).
3. Place the server blade on a flat, level work surface.

4. Remove the access panel (on page 15).
5. Remove the mezzanine assembly (on page 20).
6. Use the FlexibleLOM handle to remove the FlexibleLOM from the system board.

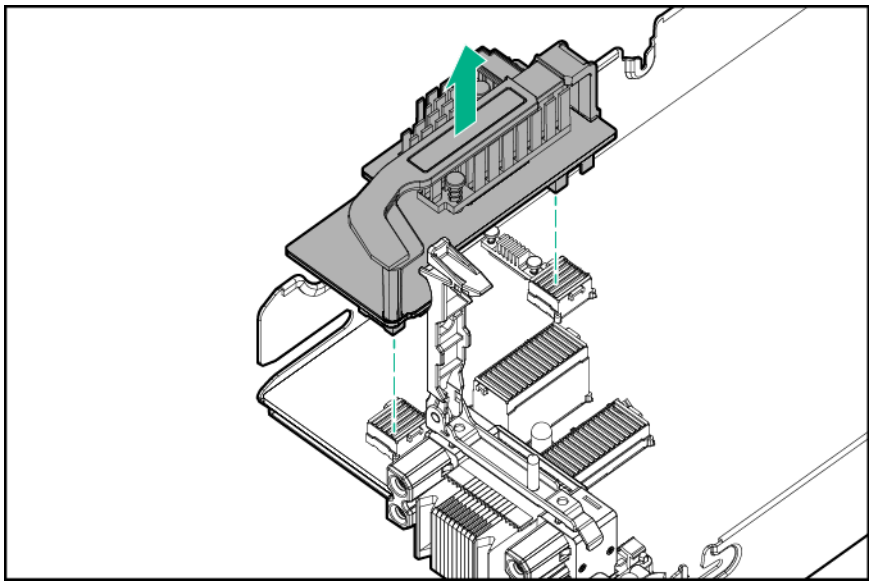

Install the FlexibleLOM

1. Power down the server blade (on page 14).
2. Remove the server blade (on page 15).
3. Place the server blade on a flat, level work surface.
4. Remove the access panel (on page 15).
5. Remove the mezzanine assembly (on page 20).
6. Install the FlexibleLOM.

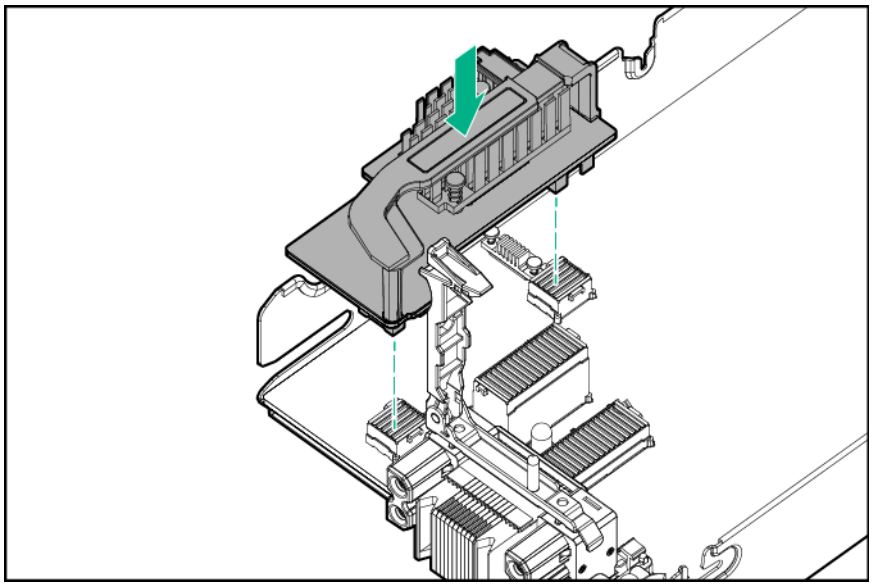

7. Install the mezzanine assembly ("Mezzanine card option" on page 35).
8. Install the access panel (on page 16).
9. Install the server blade (on page 28).

10. Power up the server blade (on page 14).

Remove the storage controller/NVMe pass-through board

1. Back up all server blade data.
2. Power down the server blade (on page 14).
3. Remove the server blade (on page 15).
4. Place the server blade on a flat, level work surface.
5. Remove the access panel (on page 15).
6. Prepare the storage controller/NVMe pass-through board for removal.

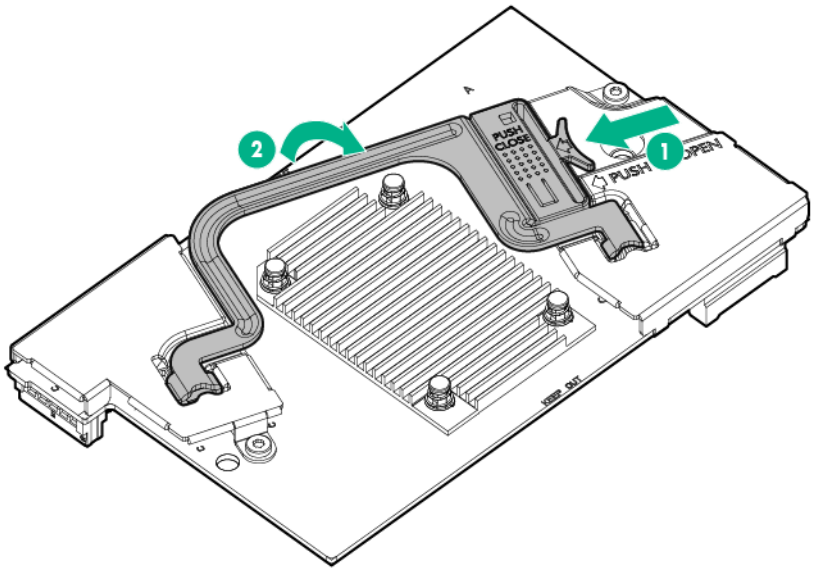

7. Remove the storage controller/NVMe pass-through board.

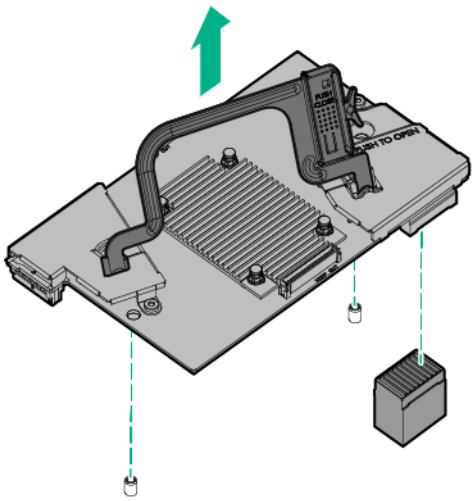

Remove a drive

1. Back up all server blade data on the drive.
2. Remove the drive.

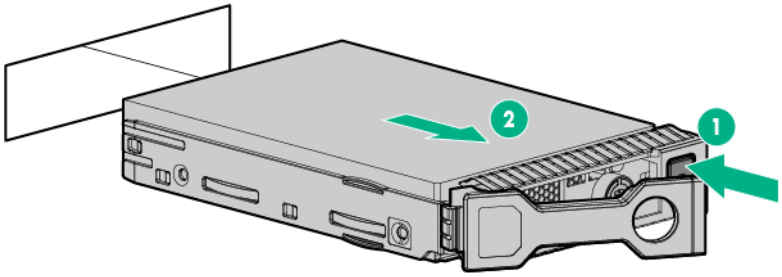

Install the front panel/drive cage assembly

1. Power down the server blade (on page 14).
2. Remove the server blade (on page 15).
3. Place the server blade on a flat, level work surface.
4. Remove the access panel (on page 15).
5. Do one of the following:
   - Remove the storage controller/NVMe pass-through board (on page 22).
   - Remove the direct connect SATA cable (on page 19).
6. Install the front panel/drive cage assembly.
   a. Align the pins on the chassis and slide the front panel/drive cage assembly into the server.
   b. Secure the component with two T-15 screws.
   c. Close the serial label pull tab.

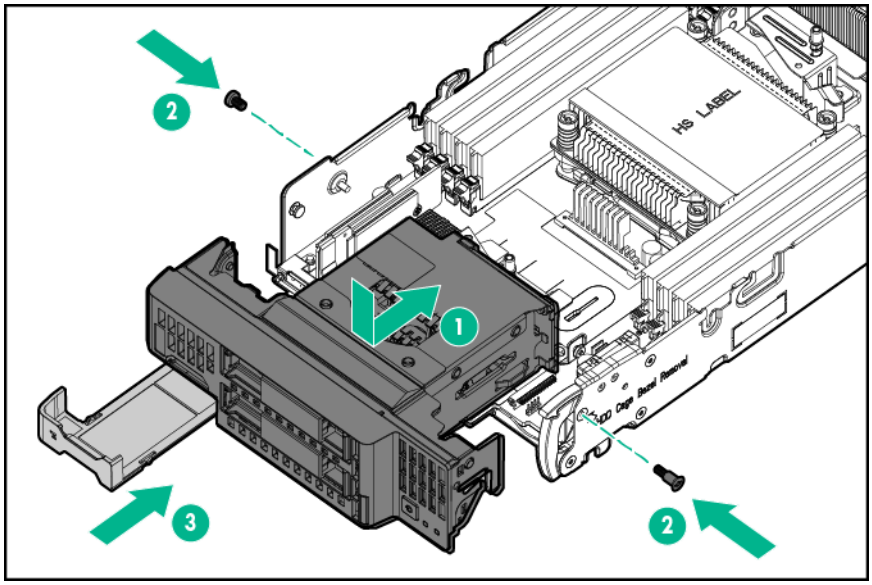

7. Install all DIMM baffles ("Install the DIMM baffles" on page 17).
8. Do one of the following:
   - Install the storage controller/NVMe pass-through board.

- Install the direct connect SATA cable (on page 19).

9. Install the access panel (on page 16).
10. Install the server blade (on page 28).
11. Power up the server blade (on page 14).

Remove the front panel/drive cage assembly

1. Power down the server blade (on page 14).
2. Remove the server blade (on page 15).
3. Place the server blade on a flat, level work surface.
4. Remove the access panel (on page 15).
5. Do one of the following:
   - Remove the storage controller/NVMe pass-through board (on page 22).
   - Remove the direct connect SATA cable (on page 19).
6. If installed, remove the internal USB drive. To locate the internal USB connector, see "System board components (on page 11)."
7. Remove all DIMM baffles ("Remove the DIMM baffles" on page 16).

> △ **CAUTION:** Always remove the storage controller/NVMe pass-through board before removing the front panel/drive cage assembly.

8. Remove the front panel/drive cage assembly:
   a. Extend the serial label pull tab from the front of the server blade.
   b. Remove the two T-15 screws from the front panel/drive cage assembly.
   c. Remove the component.

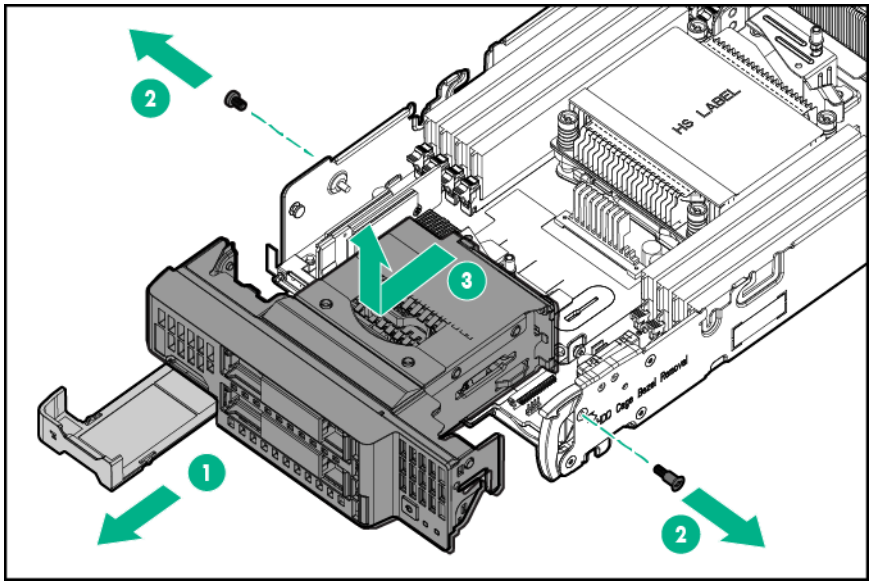

Setup

Overview

Installation of a server blade requires the following steps:

1. Install and configure a BladeSystem c-Class enclosure.
2. Install any server blade options.
3. Install interconnect modules in the enclosure.
4. Connect the interconnect modules to the network.
5. Install a server blade.
6. Complete the server blade configuration.

Installing an HPE BladeSystem c-Class enclosure

Before performing any server blade-specific procedures, install an HPE BladeSystem c-Class enclosure.

The most current documentation for server blades and other BladeSystem components is available on the Hewlett Packard Enterprise website (**http://www.hpe.com/support/BladeSystem-docs**).

Preparing the enclosure

CAUTION: Failure to install the divider in a quadrant when installing half-height blades can result in damage to the connectors on the server blades.

CAUTION: To prevent improper cooling and thermal damage, do not operate the server blade or the enclosure unless all drive and device bays are populated with either a component or a blank.

IMPORTANT: For optimal cooling and system performance, configure the c7000 enclosure with ten fans and configure the c3000 enclosure with six fans.

BladeSystem enclosures ship with device bay dividers to support half-height devices. If the dividers have been removed, always reinstall the dividers before installing half-height devices and device bay blanks. For more information on installing the device bay dividers, see the enclosure user guide.

Installing server blade options

Before installing and initializing the server blade, install any server blade options, such as an additional processor, hard drive, or mezzanine card. For server blade options installation information, see "Hardware options installation (on page 30)."

Installing interconnect modules

For specific steps to install interconnect modules, see the documentation that ships with the interconnect module.

Interconnect bay numbering and device mapping

- HPE BladeSystem c7000 Enclosure

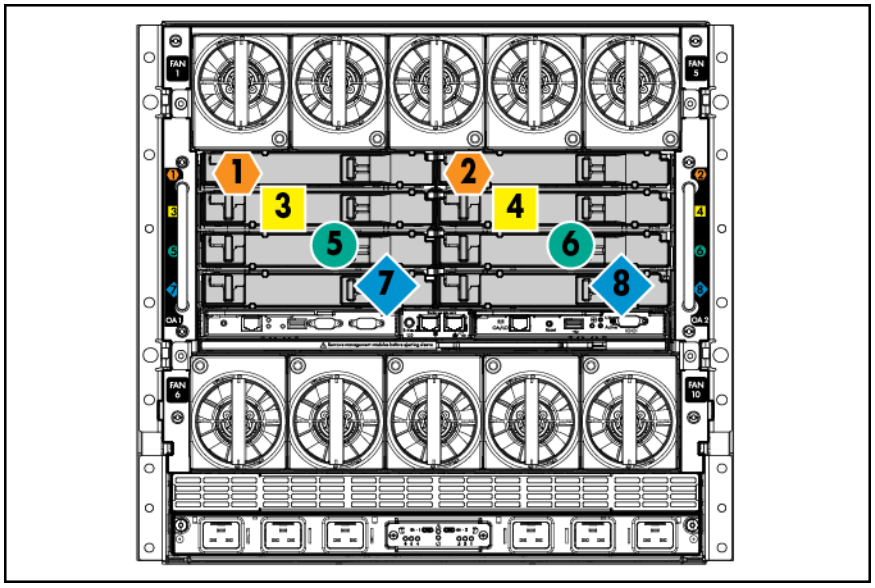

To support network connections for specific signals, install an interconnect module in the bay corresponding to the FlexibleLOM or mezzanine signals.

Server blade signal	Interconnect bay	Interconnect bay labels
FlexibleLOM	1 and 2	
Mezzanine 1	3 and 4	
Mezzanine 2	5 and 6	
Mezzanine 2	7 and 8	

For detailed port mapping information, see the BladeSystem enclosure installation poster or the BladeSystem enclosure setup and installation guide on the Hewlett Packard Enterprise website (**http://www.hpe.com/support/BladeSystem-Enclosures-docs**).

- HPE BladeSystem c3000 Enclosure

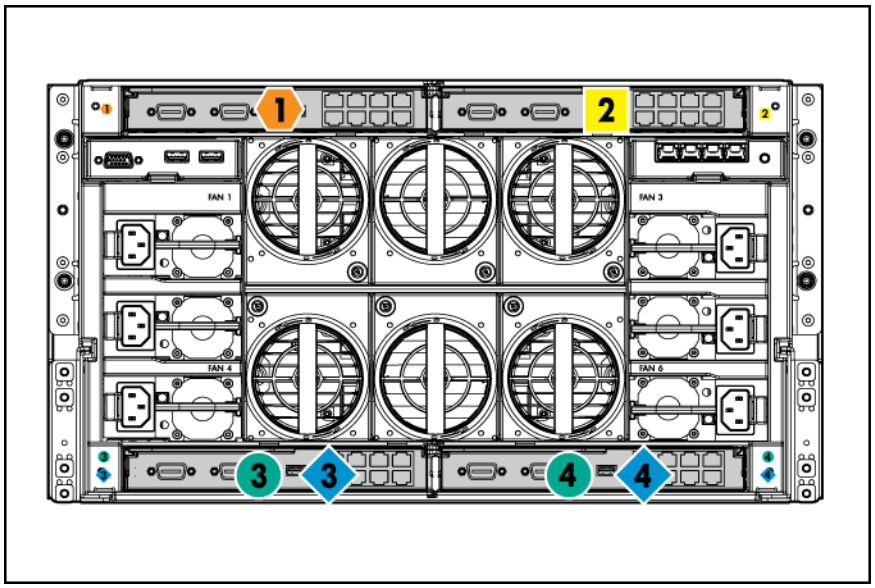

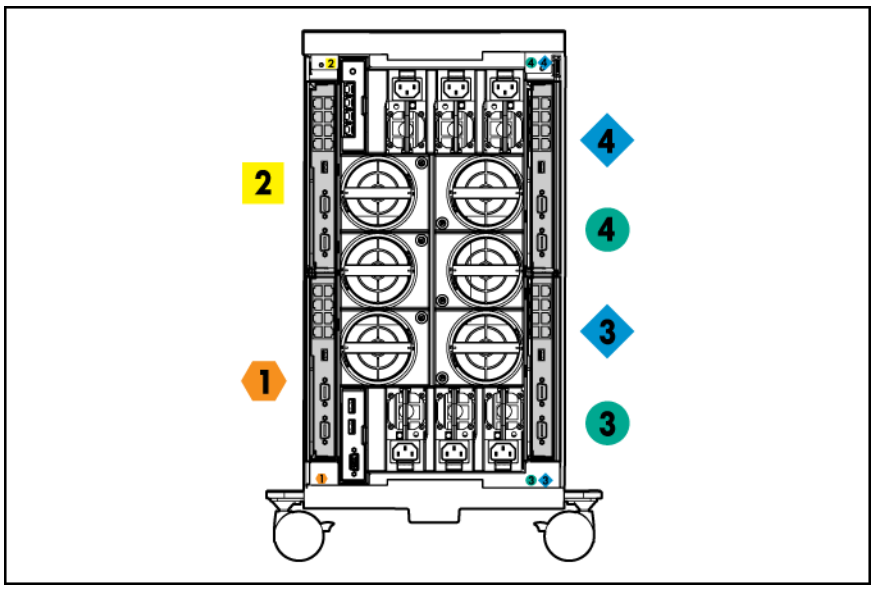

Server blade signal	Interconnect bay number	Interconnect bay label	Notes
FlexibleLOM	1	⬢	—
Mezzanine 1	2	■	Four-port cards connect to bay 2.
Mezzanine 2	3 and 4	● ◆	• Four-port cards • Ports 1 and 3 connect to bay 3. • Ports 2 and 4 connect to bay 4.

Connecting to the network

To connect the BladeSystem to a network, each enclosure must be configured with network interconnect devices to manage signals between the server blades and the external network.

Two types of interconnect modules are available for BladeSystem c-Class enclosures: Pass-Thru modules and switch modules. For more information about interconnect module options, see the Hewlett Packard Enterprise website (**http://www.hpe.com/servers/blades/interconnects**).

IMPORTANT: To connect to a network with a Pass-Thru module, always connect the Pass-Thru module to a network device that supports Gigabit or 10 Gb speed, depending on the corresponding Pass-Thru model.

Install the server blade

CAUTION: To prevent improper cooling and thermal damage, do not operate the server blade enclosure unless all bays are populated with either a component or a blank.

CAUTION: Failure to install the divider in a quadrant when installing half-height blades can result in damage to the connectors on the server blades.

For the best possible BladeSystem and Virtual Connect experience, and to prevent a future reboot, Hewlett Packard Enterprise requires updating the Onboard Administrator and Virtual Connect to the correct version before installing a ProLiant Gen9 server blade. The version information is located on the tag on the front of the server blade.

For more information on this and other specific firmware and driver requirements, as well as the latest firmware and driver versions, download the SPP on the Hewlett Packard Enterprise website (**http://www.hpe.com/servers/spp/download**).

1. Remove the device bay blank. Retain the blank for future use.

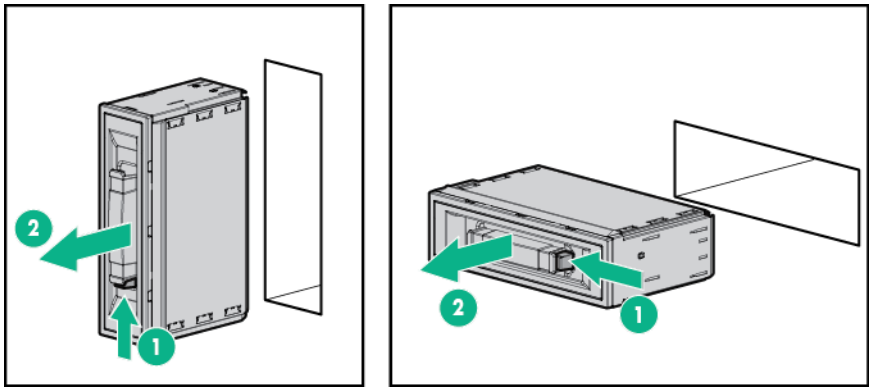

2. Remove the enclosure connector cover. Retain the blank for future use.

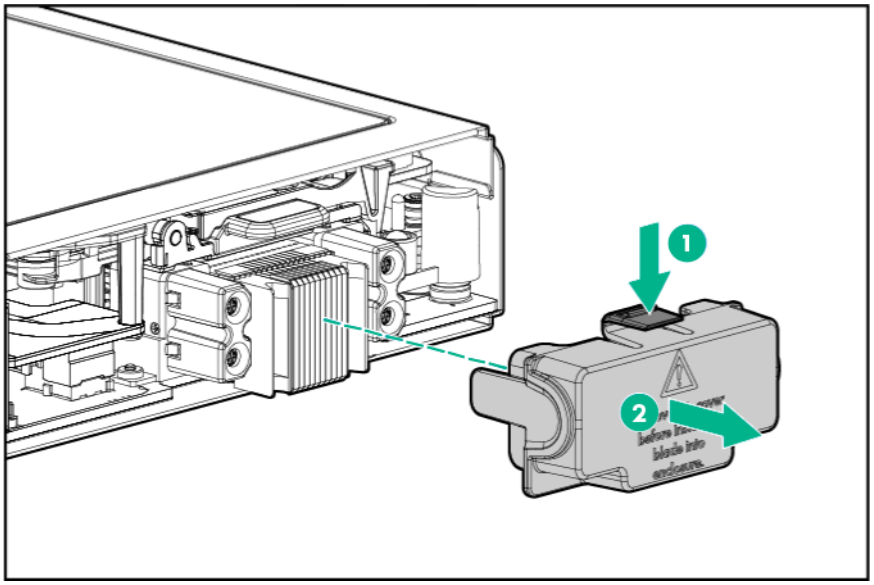

3. Install the server blade.

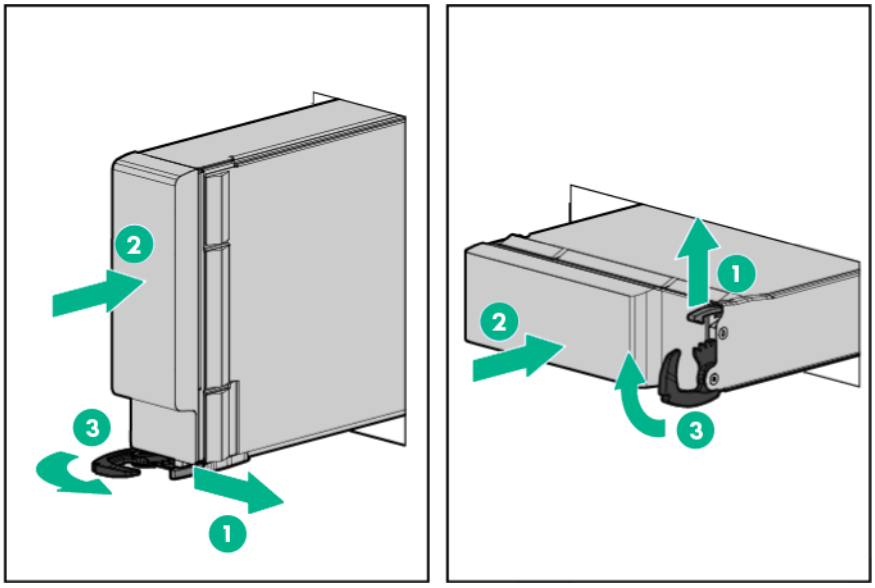

Completing the configuration

To complete the server blade and BladeSystem configuration, see the overview card that ships with the enclosure.

Hardware options installation

Introduction

If more than one option is being installed, read the installation instructions for all the hardware options and identify similar steps to streamline the installation process.

WARNING: To reduce the risk of personal injury from hot surfaces, allow the drives and the internal system components to cool before touching them.

CAUTION: To prevent damage to electrical components, properly ground the server before beginning any installation procedure. Improper grounding can cause electrostatic discharge.

The server blade supports up to two 2.5 inch SFF SAS, SATA, or NVMe drives. Ensure that the appropriate backplane is installed when installing drives.

SAS/SATA drive option

CAUTION: To prevent improper cooling and thermal damage, do not operate the server blade or the enclosure unless all drive and device bays are populated with either a component or a blank.

1. Remove the drive blank.

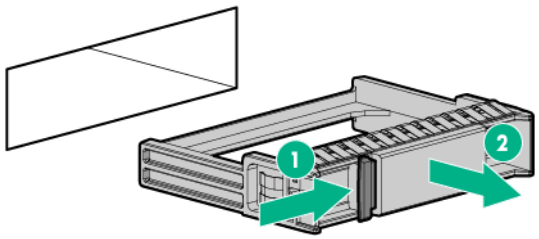

2. Prepare the drive.

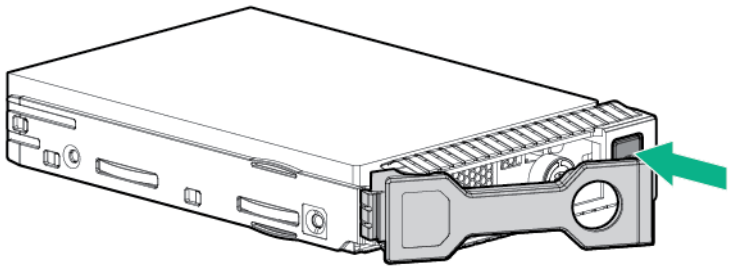

3. Install the drive.

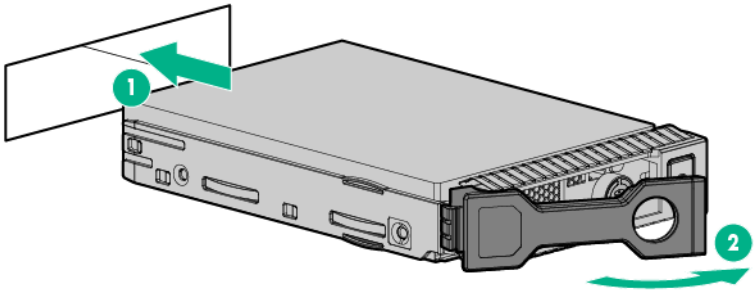

4. Determine the status of the drive from the drive LED definitions ("Hot-plug drive LED definitions" on page 9).

NVMe SSD option

> **CAUTION:** To prevent improper cooling and thermal damage, do not operate the server blade or the enclosure unless all drive and device bays are populated with either a component or a blank.

1. Remove the drive blank.

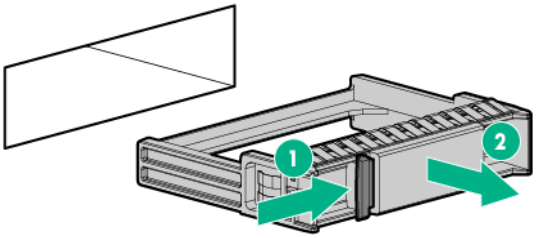

2. Press the Do Not Remove button to release the Release lever.

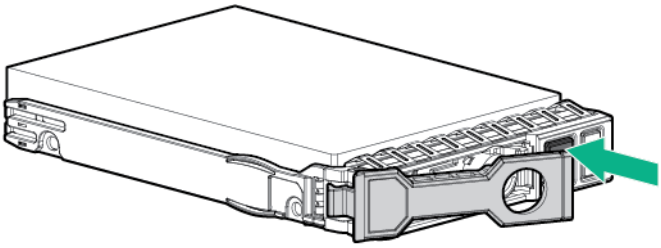

3. Install the drive.

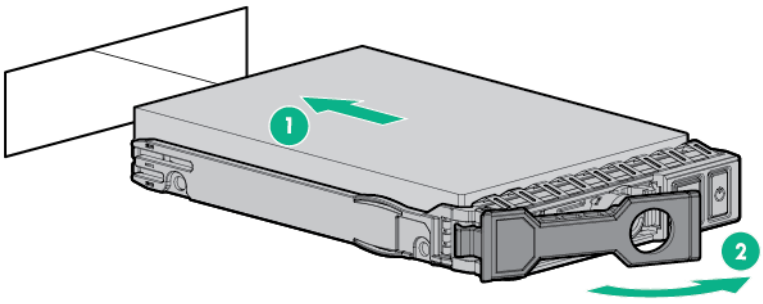

4. Determine the status of the drive from the LEDs ("NVMe SSD components" on page 10).

Storage controller/NVMe pass-through board options

To install the component:

1. Back up all server blade data.
2. Power down the server blade (on page 14).
3. Remove the server blade (on page 15).
4. Place the server blade on a flat, level work surface.
5. Remove the access panel (on page 15).
6. Prepare the storage controller/NVMe pass-through board for installation.

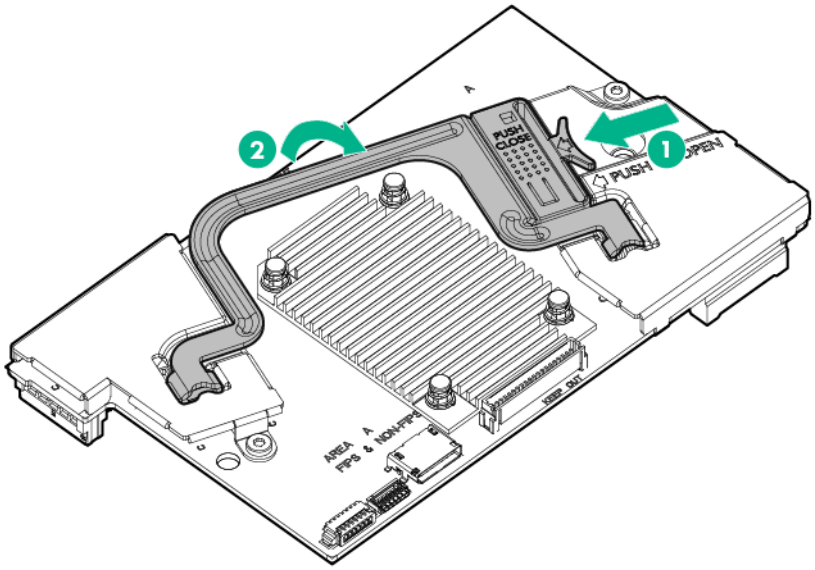

7. Align the storage controller/NVMe pass-through board with the alignment pins and lower it into server blade.

8. Push the handle down into the closed position to fully seat the storage controller/NVMe pass-through board.

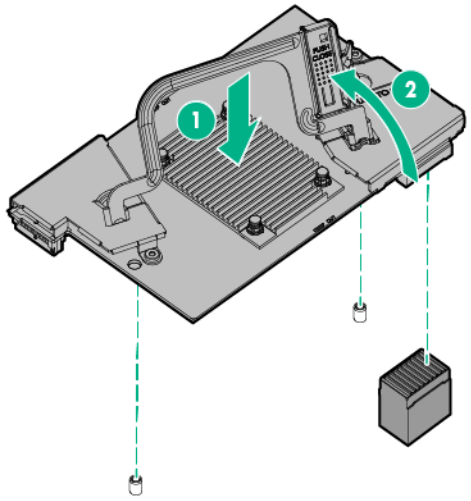

9. Install the access panel (on page 16).
10. Install the server blade (on page 28).
11. Power up the server blade (on page 14).

Smart Storage Battery option

To install the component:

1. Power down the server blade (on page 14).
2. Remove the server blade (on page 15).
3. Place the server blade on a flat, level work surface.
4. Remove the access panel (on page 15).
5. If installed, remove the direct connect SATA cable ("Remove the direct connect SATA cable" on page 19).
6. If installed, remove the internal USB drive. To locate the internal USB connector, see "System board components (on page 11)."
7. Remove the right DIMM baffle ("Remove the DIMM baffles" on page 16).

8. Install the Smart Storage Battery on the DIMM baffle.

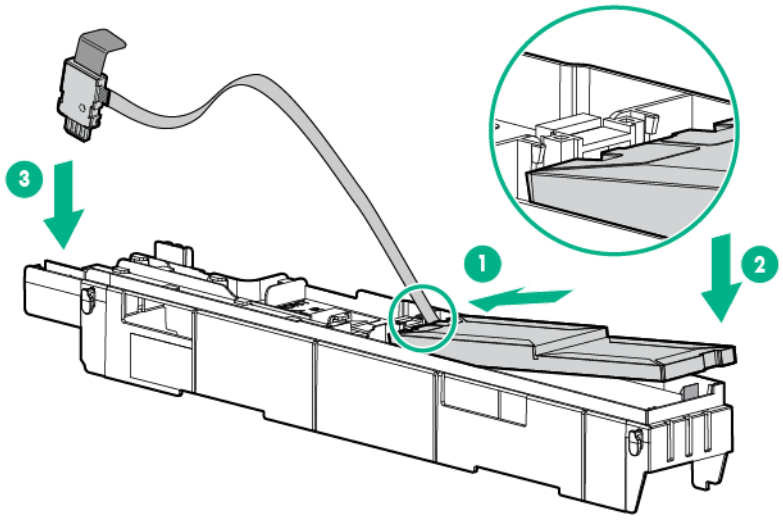

9. Route the cable on the DIMM baffle.

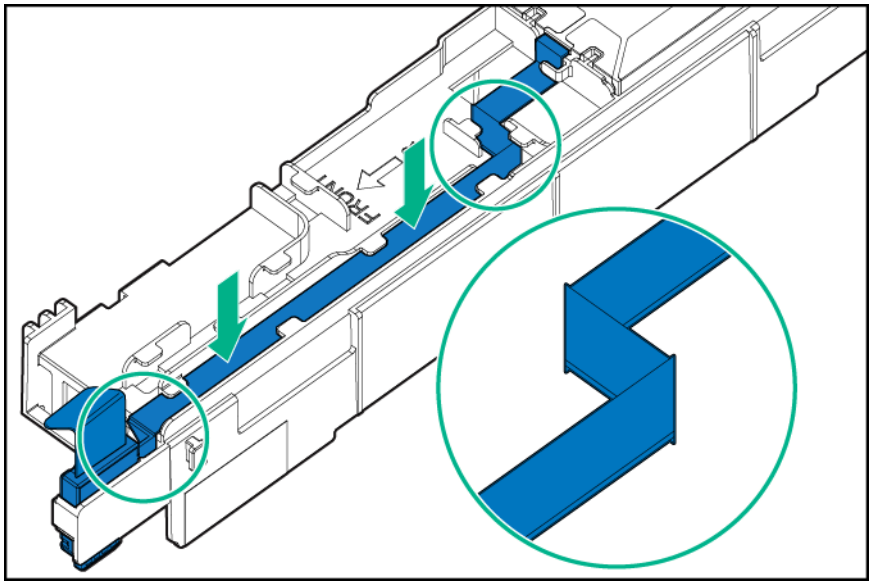

10. Align and install the DIMM baffle.

11. Press down on the cable connector to fully seat the Smart Storage Battery cable connector to the system board.

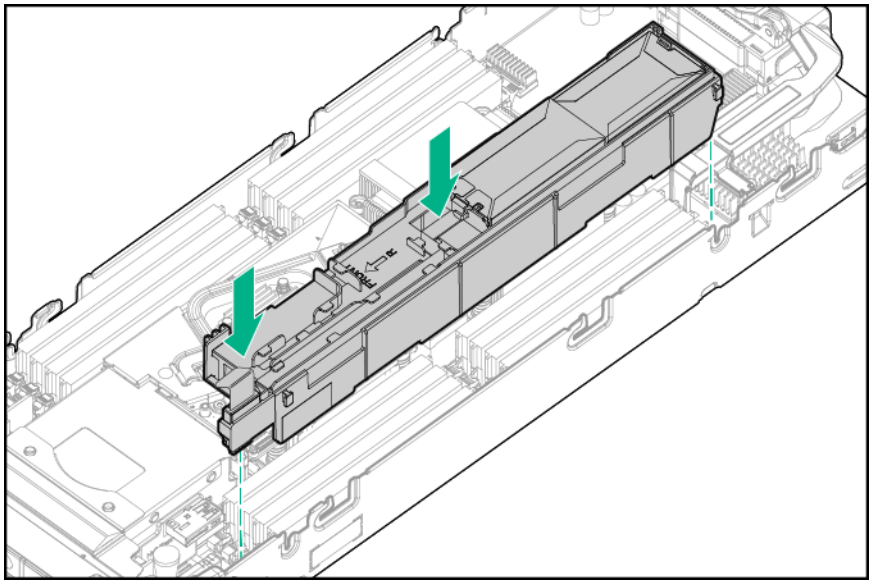

12. If removed, install the direct connect SATA cable ("Install the direct connect SATA cable" on page 19).
13. If removed, install the internal USB drive. To locate the internal USB connector, see "System board components (on page 11)."
14. Install the access panel (on page 16).
15. Install the server blade (on page 28).
16. Power up the server blade (on page 14).

Mezzanine card option

Optional mezzanine cards are classified as Type A mezzanine cards and Type B mezzanine cards. The type of the mezzanine card determines where it can be installed in the server blade.

- Install Type A mezzanine cards on Mezzanine 1 connector or Mezzanine 2 connector.
- Install Type B mezzanine cards on Mezzanine 2 connector.

Optional mezzanine cards enable network connectivity or provide Fiber Channel support. For mezzanine card locations, see "System board components (on page 11)."

When installing a mezzanine option on mezzanine connector 2, processor 2 must be installed.

For mezzanine card mapping, see "Interconnect bay numbering and device mapping (on page 26)."

To install the component:

1. Power down the server blade (on page 14).
2. Remove the server blade (on page 15).
3. Place the server blade on a flat, level work surface.
4. Remove the access panel (on page 15).

5. Remove the mezzanine assembly.

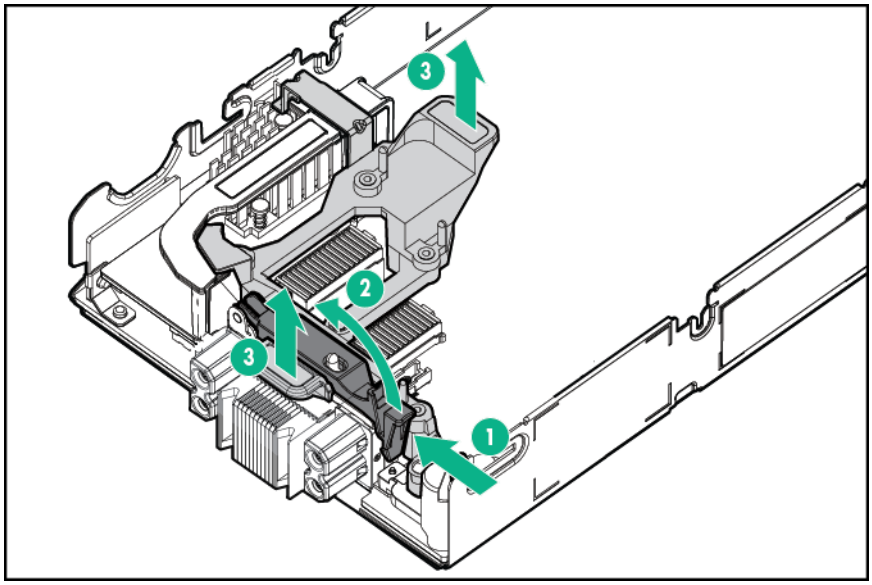

6. Align the mezzanine card with the guide pins on the mezzanine assembly.

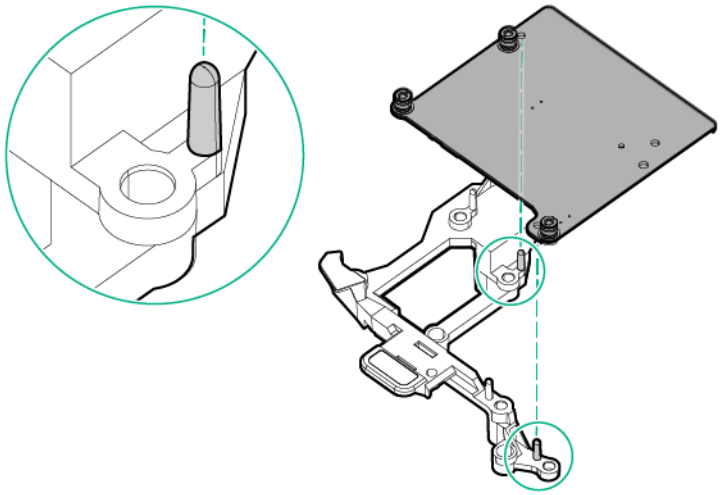

7. Install the mezzanine card in the mezzanine assembly, and then tighten the mezzanine card screws to secure the card to the mezzanine assembly.

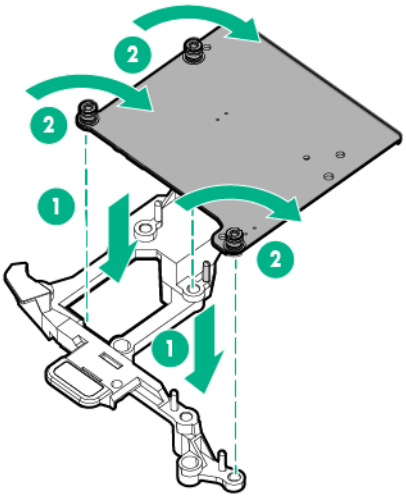

8. Align the mezzanine assembly with the guide pins on the system board, and then install the mezzanine assembly on the system board.
9. Press down firmly on the mezzanine assembly handles, and then close the mezzanine assembly latch.

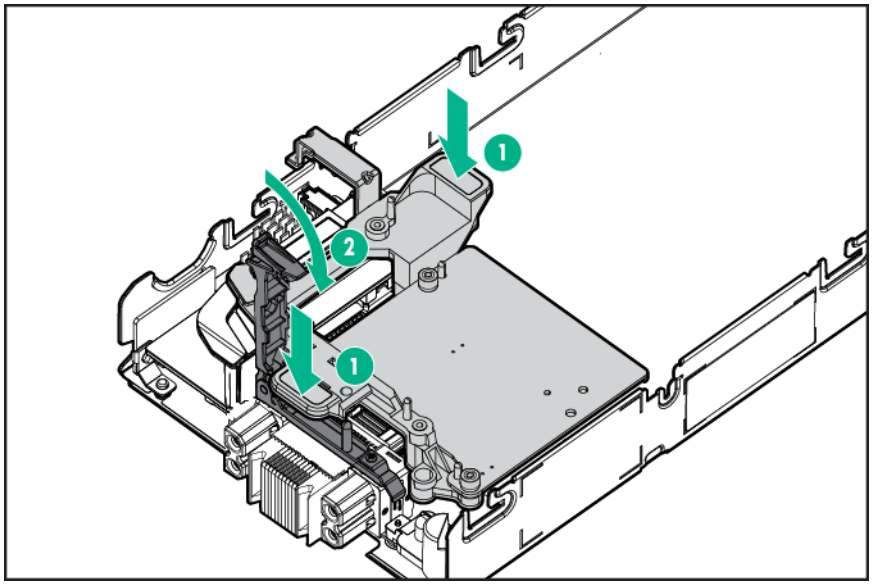

10. Install the access panel (on page 16).
11. Install the server blade (on page 28).
12. Power up the server blade (on page 14).

M.2 enablement option

To install the component:

1. Power down the server blade (on page 14).
2. Remove the server blade (on page 15).
3. Place the server blade on a flat, level work surface.

4. Remove the access panel (on page 15).
5. Do one of the following:
   - Remove the storage controller/NVMe pass-through board (on page 22).
   - Remove the direct connect SATA cable (on page 19).
6. Remove all DIMM baffles ("Remove the DIMM baffles" on page 16).
7. Remove the front panel/drive cage assembly (on page 24).
8. Install the M.2 SSD enablement board:
   a. Insert the M.2 SSD enablement board into the system board connector.
   b. Secure the M.2 SSD enablement board by tightening the screw.

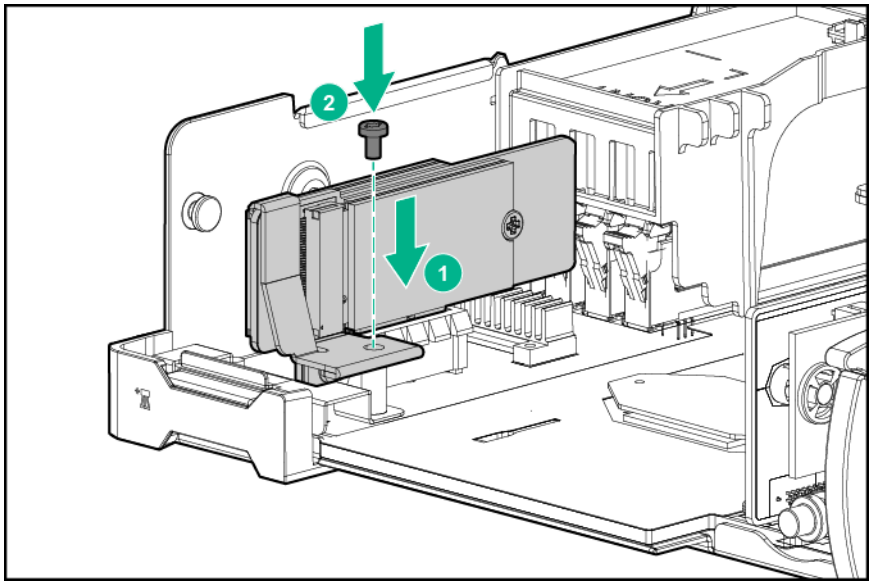

9. Install the front panel/drive cage assembly (on page 23).
10. Install all DIMM baffles ("Install the DIMM baffles" on page 17).
11. Do one of the following:
    - Install the storage controller/NVMe pass-through board.
    - Install the direct connect SATA cable (on page 19).
12. Install the access panel (on page 16).
13. Install the server blade (on page 28).
14. Power up the server blade (on page 14).

Installing a processor

WARNING: To reduce the risk of personal injury from hot surfaces, allow the drives and the internal system components to cool before touching them.

CAUTION: To prevent possible server blade malfunction and damage to the equipment, multiprocessor configurations must contain processors with the same part number.

CAUTION: The heatsink thermal interface media is not reusable and must be replaced if the heatsink is removed from the processor after it has been installed.

CAUTION: To prevent possible server blade overheating, always populate processor socket 2 with a processor and a heatsink or a processor socket cover and a heatsink blank.

CAUTION: To prevent damage to electrical components, properly ground the server blade before beginning any installation procedure. Improper grounding can cause ESD.

IMPORTANT: Processor socket 1 must be populated at all times or the server blade does not function.

To install a processor:

1. Update the system ROM.

   Locate and download the latest ROM version from the Hewlett Packard Enterprise website (**http://www.hpe.com/support**). Follow the instructions on the website to update the system ROM.
2. Power down the server blade (on page 14).
3. Remove the server blade (on page 15).
4. Place the server blade on a flat, level work surface.
5. Remove the access panel (on page 15).
6. Do one of the following:
   - Remove the storage controller/NVMe pass-through board (on page 22).
   - Remove the direct connect SATA cable (on page 19).
7. Remove all DIMM baffles ("Remove the DIMM baffles" on page 16).
8. Using a no. 2 Phillips screwdriver, remove the heatsink blank.

   Retain the heatsink blank for future use.

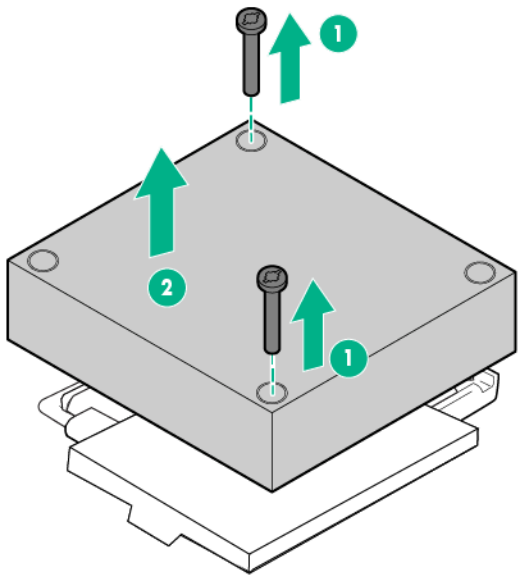

9. Open each of the processor locking levers in the order indicated in the following illustration, and then open the processor retaining bracket.

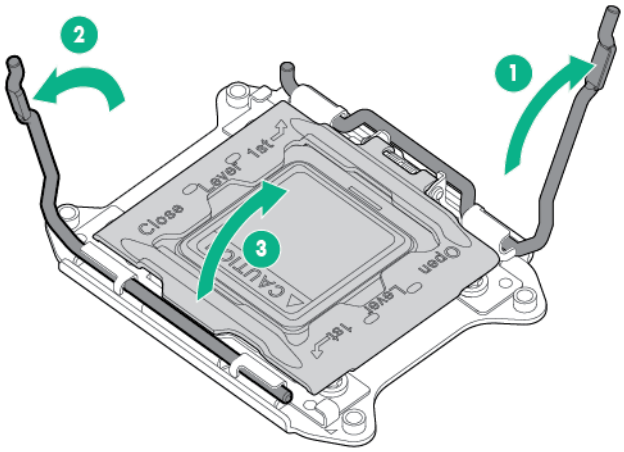

10. Remove the clear processor socket cover. Retain the processor socket cover for future use.

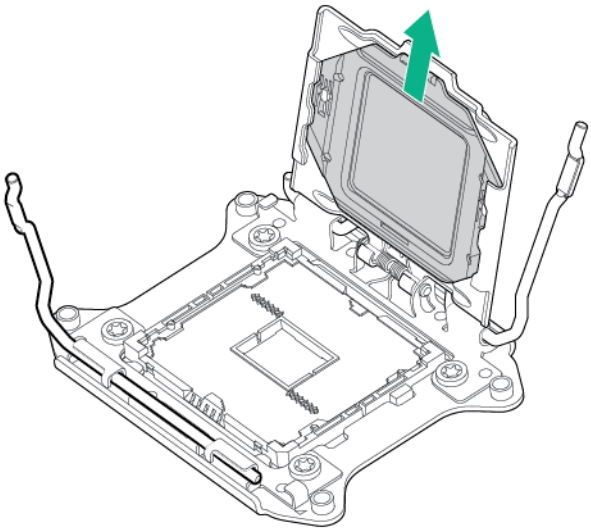

△ **CAUTION: THE PINS ON THE SYSTEM BOARD ARE VERY FRAGILE AND EASILY DAMAGED.** To avoid damage to the system board, do not touch the processor or the processor socket contacts.

11. Install the processor. Verify that the processor is fully seated in the processor retaining bracket by visually inspecting the processor installation guides on either side of the processor. **THE PINS ON THE SYSTEM BOARD ARE VERY FRAGILE AND EASILY DAMAGED.**

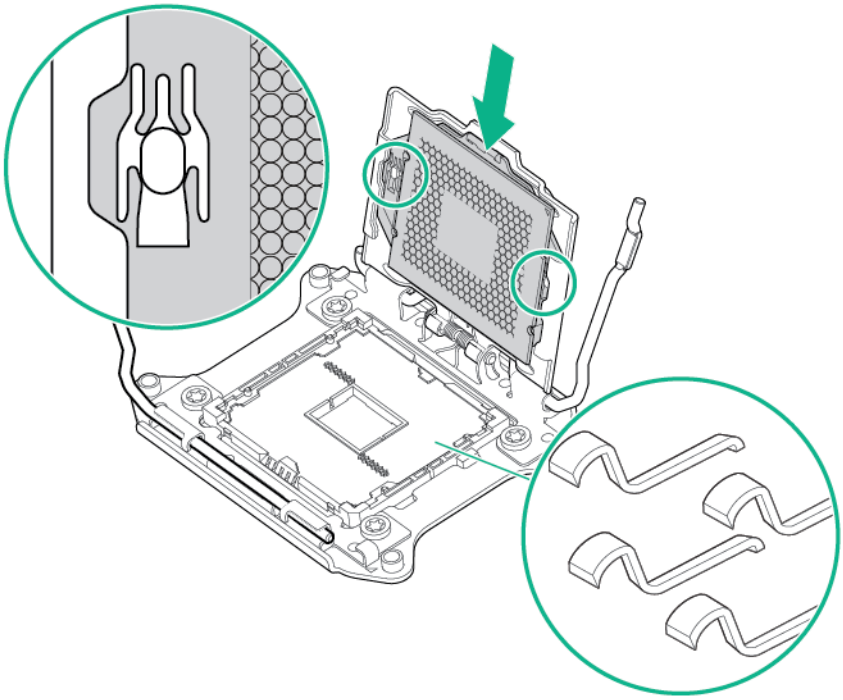

12. Close the processor retaining bracket. When the processor is installed properly inside the processor retaining bracket, the processor retaining bracket clears the flange on the front of the socket.

> △ **CAUTION:** Do not press down on the processor. Pressing down on the processor might damage the processor socket and the system board. Press only in the area indicated on the processor retaining bracket.

13. Press and hold the processor retaining bracket in place, and then close each processor locking lever. Press only in the area indicated on the processor retaining bracket.

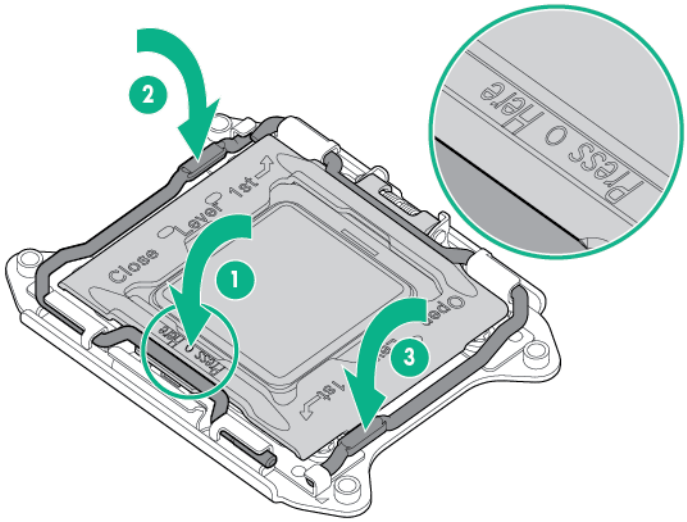

14. Remove the thermal interface protective cover from the heatsink.

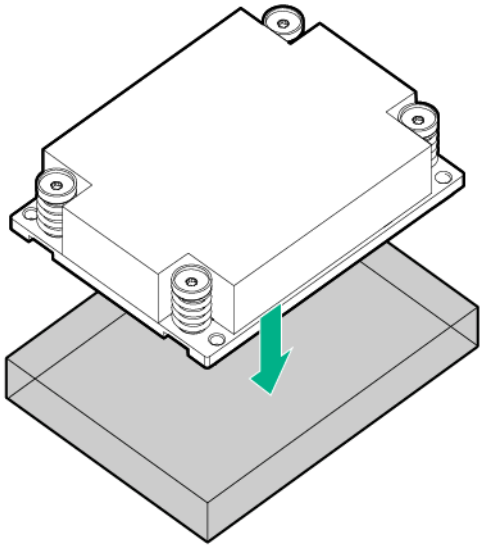

△ **CAUTION:** To avoid damage to the system board, processor socket, and screws, do not overtighten the heatsink screws.

15. Using a T-15 screwdriver, install the heatsink.

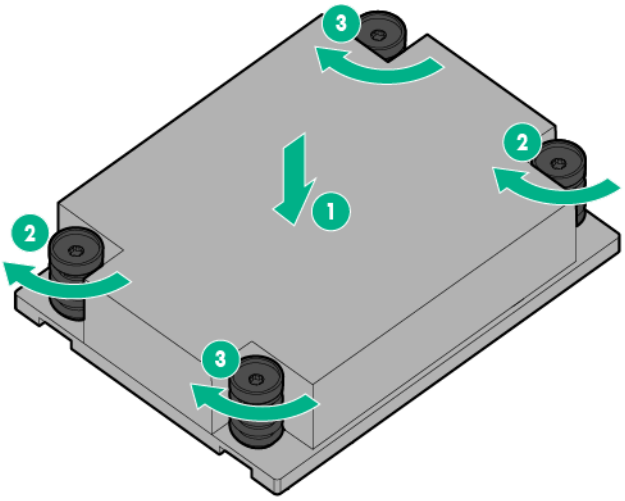

16. Install all DIMM baffles ("Install the DIMM baffles" on page 17).
17. Do one of the following:
    - Install the storage controller/NVMe pass-through board.
    - Install the direct connect SATA cable (on page 19).
18. Install the access panel (on page 16).
19. Install the server blade (on page 28).
20. Power up the server blade (on page 14).

Memory options

IMPORTANT: This server blade does not support mixing LRDIMMs and RDIMMs. Attempting to mix any combination of these DIMMs can cause the server to halt during BIOS initialization.

The memory subsystem in this server blade can support LRDIMMs or RDIMMs:

- RDIMMs offer address parity protection.
- LRDIMMs support higher densities than single-rank and dual-rank RDIMMs. This support enables you to install higher capacity DIMMs, resulting in higher system capacities and higher bandwidth.

All types are referred to as DIMMs when the information applies to all types. When specified as LRDIMM or RDIMM, the information applies to that type only. All memory installed in the server blade must be of the same type.

Memory-processor compatibility information

For the latest memory configuration information, see the product QuickSpecs on the Hewlett Packard Enterprise website (**http://www.hpe.com/info/qs**).

DIMM types

- Intel Xeon E5-2600 v3 processors are optimized for:
  - Single-rank and dual-rank PC4-2133 (DDR4-2133) RDIMMs operating at up to 2133 MT/s
  - Dual-rank and quad-rank PC4-2133 (DDR4-2133) LRDIMMs operating at up to 2133 MT/s
- Intel Xeon E5-2600 v4 processors are optimized for:
  - Single-rank and dual-rank PC4-2400T (DDR4-2400) RDIMMs operating at up to 2400 MT/s
  - Dual-rank, quad-rank, and octal-rank PC4-2400T (DDR4-2400) LRDIMMs operating at up to 2400 MT/s

DIMM specifications

DIMM specifications with Intel Xeon E5-2600 v3 processors installed

Type	Rank	Capacity (GB)	Native speed (MT/s)	Voltage
RDIMM	Single	8	2133	STD
RDIMM	Dual	8	2133	STD
RDIMM	Dual	16	2133	STD
LRDIMM	Dual	16	2133	STD
RDIMM	Dual	32	2133	STD
LRDIMM	Quad	32	2133	STD
LRDIMM	—	48	2133	STD
LRDIMM	Quad	64	2133	STD

DIMM specifications with Intel Xeon E5-2600 v4 processors installed

Type	Rank	Capacity (GB)	Native speed (MT/s)	Voltage
RDIMM	Single	8	2400	STD
RDIMM	Single	16	2400	STD
RDIMM	Dual	16	2400	STD
RDIMM	Dual	32	2400	STD
LRDIMM	Dual	32	2400	STD
LRDIMM	Quad	64	2400	STD
LRDIMM	Octal	128	2400	STD

Populated DIMM speed (MT/s)

Operating memory speed is a function of rated DIMM speed, the number of DIMMs installed per channel, processor model, and the speed selected in the BIOS/Platform Configuration (RBSU) of the UEFI System Utilities ("UEFI System Utilities" on page 62).

Populated DIMM speed with Intel Xeon E5-2600 v3 processors installed

Type	Rank	1 DIMM per channel (MT/s)	2 DIMMs per channel (MT/s)
RDIMM	Single	2133	2133
RDIMM	Dual	2133	2133
LRDIMM	Dual	2133	2133
LRDIMM	Quad	2133	2133

Populated DIMM speed with Intel Xeon E5-2600 v4 processors installed

Type	Rank	1 DIMM per channel (MT/s)	2 DIMMs per channel (MT/s)
RDIMM	Single	2400	2133
RDIMM	Dual	2400	2400*
LRDIMM	Dual	2400	2400
LRDIMM	Quad	2400	2400
LRDIMM	Octal	2400	2400

* HPE requires users to update the BIOS ROM to October 2016 or later versions to properly support maximum DIMM speed.

Maximum memory capacity

Maximum memory capacity is a function of DIMM capacity, number of installed DIMMs, memory type, and number of installed processors.

Maximum memory capacity with Intel Xeon E5-2600 v3 processors installed

DIMM type	DIMM rank	Capacity (GB)	Maximum capacity for one processor (GB)	Maximum capacity for two processors (GB)
RDIMM	Single	8	64	128
RDIMM	Dual	8	64	128
RDIMM	Dual	16	128	256
LRDIMM	Dual	16	128	256
RDIMM	Dual	32	256	512
LRDIMM	Quad	32	256	512
LRDIMM	—	48	384	768
LRDIMM	Quad	64	512	1024

Maximum memory capacity with Intel Xeon E5-2600 v4 processors installed

DIMM type	DIMM rank	Capacity (GB)	Maximum capacity for one processor (GB)	Maximum capacity for two processors (GB)
RDIMM	Single	8	64	128
RDIMM	Single	16	128	256
RDIMM	Dual	16	128	256
RDIMM	Dual	32	256	512
LRDIMM	Dual	32	256	512
LRDIMM	Quad	64	512	1024
LRDIMM	Octal	128	1024	2048

SmartMemory

SmartMemory authenticates and unlocks certain features available only on Qualified memory and verifies whether installed memory has passed Hewlett Packard Enterprise qualification and test processes. Qualified memory is performance-tuned for ProLiant and BladeSystem servers and provides future enhanced support through Active Health and manageability software.

Memory subsystem architecture

The memory subsystem in this server blade is divided into channels. Each processor supports four channels, and each channel supports two DIMM slots.

Channel	Population order	Slot number
1	A E	1 2
2	B F	3 4
3	C G	8 7
4	D H	6 5

For the location of the slot numbers, see "DIMM slot locations (on page 12)."

This multi-channel architecture provides enhanced performance in Advanced ECC mode. This architecture also enables Online Spare Memory mode.

DIMM slots in this server are identified by number and by letter. Letters identify the population order. Slot numbers indicate the DIMM slot ID for spare replacement.

Single-, dual-, and quad-rank DIMMs

To understand and configure memory protection modes properly, an understanding of single-, dual-, and quad-rank DIMMs is helpful. Some DIMM configuration requirements are based on these classifications.

A single-rank DIMM has one set of memory chips that is accessed while writing to or reading from the memory. A dual-rank DIMM is similar to having two single-rank DIMMs on the same module, with only one rank accessible at a time. A quad-rank DIMM is, effectively, two dual-rank DIMMs on the same module. Only one rank is accessible at a time. The server blade memory control subsystem selects the proper rank within the DIMM when writing to or reading from the DIMM.

Dual- and quad-rank DIMMs provide the greatest capacity with the existing memory technology. For example, if current DRAM technology supports 8-GB single-rank DIMMs, a dual-rank DIMM would be 16 GB, and a quad-rank DIMM would be 32 GB.

LRDIMMs are labeled as quad-rank DIMMs. There are four ranks of DRAM on the DIMM, but the LRDIMM buffer creates an abstraction that allows the DIMM to appear as a dual-rank DIMM to the system. The LRDIMM buffer isolates the electrical loading of the DRAM from the system to allow for faster operation. This allows higher memory operating speed compared to quad-rank RDIMMs.

DIMM identification

To determine DIMM characteristics, see the label attached to the DIMM and refer to the following illustration and table.

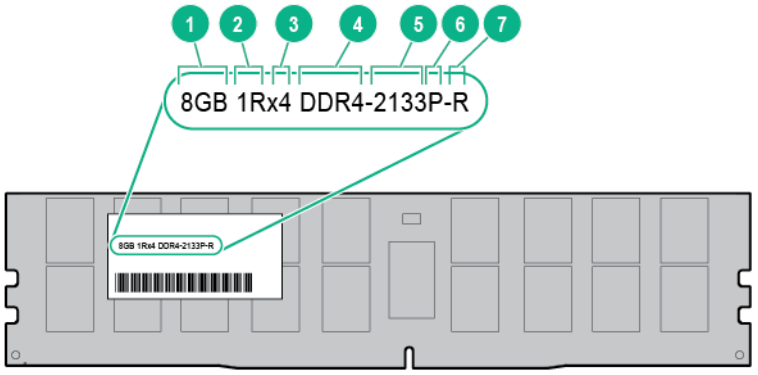

Item	Description	Definition
1	Capacity	8 GB 16 GB 32 GB 64 GB 128 GB
2	Rank	1R = Single-rank 2R = Dual-rank 4R = Quad-rank 8R = Octal-rank
3	Data width on DRAM	x4 = 4-bit x8 = 8-bit
4	Memory generation	DDR4
5	Maximum memory speed	2133 MT/s 2400 MT/s
6	CAS latency	P=15-15-15 T=17-17-17 U=20-18-18
7	DIMM type	R = RDIMM (registered) L = LRDIMM (load reduced)

For more information about product features, specifications, options, configurations, and compatibility, see the product QuickSpecs on the Hewlett Packard Enterprise website (**http://www.hpe.com/info/qs**).

Memory configurations

To optimize server blade availability, the server blade supports the following AMP modes:

- Advanced ECC—Provides up to 4-bit error correction. This mode is the default option for this server blade.
- Online spare memory—Provides protection against failing or degraded DIMMs. Certain memory is reserved as spare, and automatic failover to spare memory occurs when the system detects a DIMM that is degrading. This allows DIMMs that have a higher probability of receiving an uncorrectable memory error (which would result in system downtime) to be removed from operation.
- Mirrored memory—Provides maximum protection against failed DIMMs. Uncorrectable errors in one channel are corrected by the mirror channel.

Advanced Memory Protection options are configured in the BIOS/Platform Configuration (RBSU). If the requested AMP mode is not supported by the installed DIMM configuration, the server blade boots in Advanced ECC mode. For more information, see the *HPE UEFI System Utilities User Guide for HPE ProLiant Gen9 Servers* on the Hewlett Packard Enterprise website (**http://www.hpe.com/info/ProLiantUEFI/docs**).

Advanced ECC memory configuration

Advanced ECC memory is the default memory protection mode for this server blade. Standard ECC can correct single-bit memory errors and detect multi-bit memory errors. When multi-bit errors are detected using Standard ECC, the error is signaled to the server blade and causes the server blade to halt.

Advanced ECC protects the server blade against some multi-bit memory errors. Advanced ECC can correct both single-bit memory errors and 4-bit memory errors if all failed bits are on the same DRAM device on the DIMM.

Advanced ECC provides additional protection over Standard ECC because it is possible to correct certain memory errors that would otherwise be uncorrected and result in a server blade failure. Using HPE Advanced Memory Error Detection technology, the server blade provides notification when a DIMM is degrading and has a higher probability of uncorrectable memory error.

Online Spare memory configuration

Online spare memory provides protection against degraded DIMMs by reducing the likelihood of uncorrected memory errors. This protection is available without any operating system support.

Online spare memory protection dedicates one rank of each memory channel for use as spare memory. The remaining ranks are available for OS and application use. If correctable memory errors occur at a rate higher than a specific threshold on any of the non-spare ranks, the server blade automatically copies the memory contents of the degraded rank to the online spare rank. The server blade then deactivates the failing rank and automatically switches over to the online spare rank.

Mirrored memory configuration

Mirroring provides protection against uncorrected memory errors that would otherwise result in server blade downtime. Mirroring is performed at the channel level to one memory channel pair that can be either:

- Channel 1 data being mirrored in channel 2
- Channel 3 data being mirrored in channel 4

If an uncorrectable error is detected in the active memory channel, data is retrieved from the mirror channel. This channel becomes the new active channel, and the system disables the channel with the failed DIMM.

General DIMM slot population guidelines

Observe the following guidelines for all AMP modes:

- Install DIMMs that are optimized for the installed processor.

  To identify the processor type installed in the server blade, use the BIOS/Platform Configuration (RBSU) of the UEFI System Utilities ("Identifying the processor type" on page 48).
- Install DIMMs only if the corresponding processor is installed.
- Do not mix LRDIMMs and RDIMMs.
- White DIMM slots denote the first slot of a channel (Ch 1-A, Ch 2-B, Ch 3-C, Ch 4-D).
- When only one processor is installed, install DIMMs in sequential alphabetic order: A, B, C, D, E, F, and so forth.

- When two processors are installed, install the DIMMs in sequential alphabetical order balanced between the two processors: P1-A, P2-A, P1-B, P2-B, P1-C, P2-C, and so forth.
- When single-rank, dual-rank, and quad-rank DIMMs are populated for two DIMMs per channel, always populate the higher number rank DIMM first (starting from the farthest slot). For example, first quad-rank DIMM, then dual-rank DIMM, and then lastly single-rank DIMM.
- DIMMs should be populated starting farthest from the processor on each channel.

For more information about server blade memory, see the Hewlett Packard Enterprise website (**http://www.hpe.com/info/memory**).

Advanced ECC population guidelines

For Advanced ECC mode configurations, observe the following guidelines:

- Observe the general DIMM slot population guidelines (on page 47).
- DIMMs may be installed individually.

Online spare population guidelines

For Online Spare memory mode configurations, observe the following guidelines:

- Observe the general DIMM slot population guidelines (on page 47).
- Each channel must have a valid online spare configuration.
- Each channel can have a different valid online spare configuration.
- Each populated channel must have a spare rank. A single dual-rank DIMM is not a valid configuration.

Mirrored Memory population guidelines

For Mirrored Memory mode configurations, observe the following guidelines:

- Observe the general DIMM slot population guidelines (on page 47).
- Install DIMMs in either channel 1 and channel 2, or channel 3 and channel 4. Installed DIMMs must be identical in terms of size and organization.
- In multi-processor configurations, each processor must have a valid Mirrored Memory configuration.

Identifying the processor type

The processor type installed in the server blade is briefly displayed during POST. To view this information and additional processor specifications, do the following:

1. Reboot the server.

   The server restarts and the POST screen appears.
2. Press **F9**.

   The System Utilities screen appears.
3. Select **System Information** | **Processor Information**.

   The Processor Information screen shows detailed information about the processors installed in the server.
4. Press **Esc** until the main menu is displayed.
5. Select **Reboot the System** to exit the utility and resume the boot process.

Installing a DIMM

CAUTION: To avoid damage to the hard drives, memory, and other system components, the air baffle, drive blanks, and access panel must be installed when the server is powered up.

CAUTION: To avoid damage to the hard drives, memory, and other system components, be sure to install the correct DIMM baffles for your server model.

1. Power down the server blade (on page 14).
2. Remove the server blade (on page 15).
3. Place the server blade on a flat, level work surface.
4. Remove the access panel (on page 15).
5. If installing processor 1 DIMMs, remove the mezzanine assembly ("Remove the mezzanine assembly" on page 20).
6. If installing processor 1 DIMMs number 5-8, remove the FlexibleLOM.
7. If DIMM installation requires removing the right DIMM baffle, do the following:
   a. If installed, remove the direct connect SATA cable ("Remove the direct connect SATA cable" on page 19).
   b. If installed, remove the internal USB drive. To locate the internal USB connector, see "System board components (on page 11)."
8. Remove all DIMM baffles ("Remove the DIMM baffles" on page 16).
9. Install the DIMM.

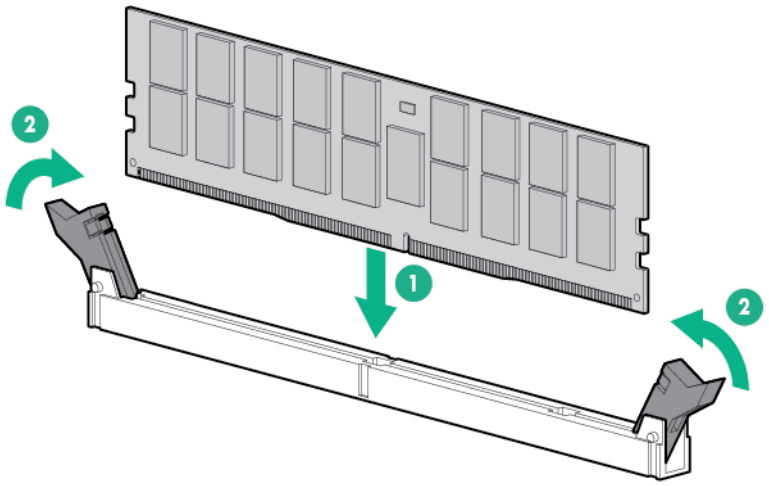

10. Install all DIMM baffles ("Install the DIMM baffles" on page 17).
11. If removed, install the direct connect SATA cable ("Install the direct connect SATA cable" on page 19).
12. If removed, install the internal USB drive. To locate the internal USB connector, see "System board components (on page 11)."
13. Install the FlexibleLOM (on page 21).
14. Install the mezzanine assembly ("Mezzanine card option" on page 35).
15. Install the access panel (on page 16).
16. Install the server blade (on page 28).
17. Power up the server blade (on page 14).

To configure the memory mode, use UEFI System Utilities (on page 62).

HPE Trusted Platform Module option

For more information about product features, specifications, options, configurations, and compatibility, see the product QuickSpecs on the Hewlett Packard Enterprise website (**http://www.hpe.com/info/qs**).

Use these instructions to install and enable a TPM on a supported server blade. This procedure includes three sections:

1. Installing the Trusted Platform Module board.
2. Retaining the recovery key/password (on page 52).
3. Enabling the Trusted Platform Module (on page 52).

   Enabling the TPM requires accessing BIOS/Platform Configuration (RBSU) in the UEFI System Utilities (on page 62).

TPM installation requires the use of drive encryption technology, such as the Microsoft Windows BitLocker Drive Encryption feature. For more information on BitLocker, see the Microsoft website (**http://www.microsoft.com**).

> **CAUTION:** Always observe the guidelines in this document. Failure to follow these guidelines can cause hardware damage or halt data access.

When installing or replacing a TPM, observe the following guidelines:

- Do not remove an installed TPM. Once installed, the TPM becomes a permanent part of the system board.
- When installing or replacing hardware, Hewlett Packard Enterprise service providers cannot enable the TPM or the encryption technology. For security reasons, only the customer can enable these features.
- When returning a system board for service replacement, do not remove the TPM from the system board. When requested, Hewlett Packard Enterprise Service provides a TPM with the spare system board.
- Any attempt to remove an installed TPM from the system board breaks or disfigures the TPM security rivet. Upon locating a broken or disfigured rivet on an installed TPM, administrators should consider the system compromised and take appropriate measures to ensure the integrity of the system data.
- When using BitLocker, always retain the recovery key/password. The recovery key/password is required to enter Recovery Mode after BitLocker detects a possible compromise of system integrity.
- Hewlett Packard Enterprise is not liable for blocked data access caused by improper TPM use. For operating instructions, see the encryption technology feature documentation provided by the operating system.

Installing the Trusted Platform Module board

This server supports both TPM 1.2 and TPM 2.0. However, once the TPM version 1.2 is installed on the system board, it can no longer be upgraded to TPM version 2.0.

> **WARNING:** To reduce the risk of personal injury from hot surfaces, allow the drives and the internal system components to cool before touching them.

1. Power down the server blade (on page 14).
2. Remove the server blade (on page 15).
3. Place the server blade on a flat, level work surface.
4. Remove the access panel (on page 15).
5. Do one of the following:

- Remove the storage controller/NVMe pass-through board (on page 22).
- Remove the direct connect SATA cable (on page 19).

6. If installed, remove the internal USB drive. To locate the internal USB connector, see "System board components (on page 11)."
7. Remove the DIMM baffle ("Remove the DIMM baffles" on page 16).
8. Remove the front panel/drive cage assembly (on page 24).
9. Locate the TPM connector ("System board components" on page 11).

> **CAUTION:** Any attempt to remove an installed TPM from the system board breaks or disfigures the TPM security rivet. Upon locating a broken or disfigured rivet on an installed TPM, administrators should consider the system compromised and take appropriate measures to ensure the integrity of the system data.

10. Install the TPM board. Press down on the connector to seat the board ("System board components" on page 11).

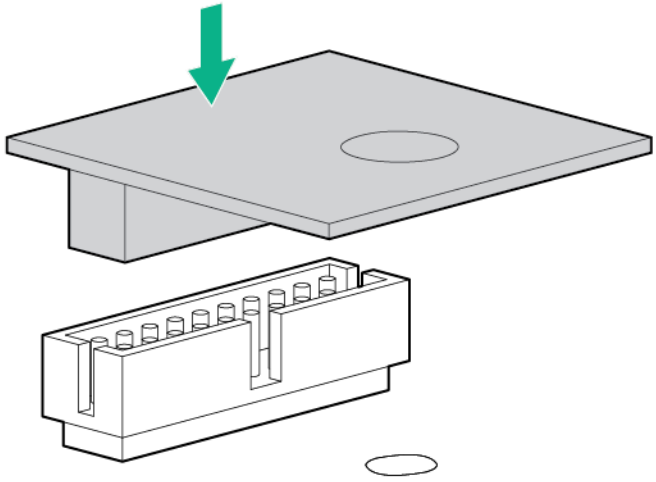

11. Install the TPM security rivet by pressing the rivet firmly into the system board.

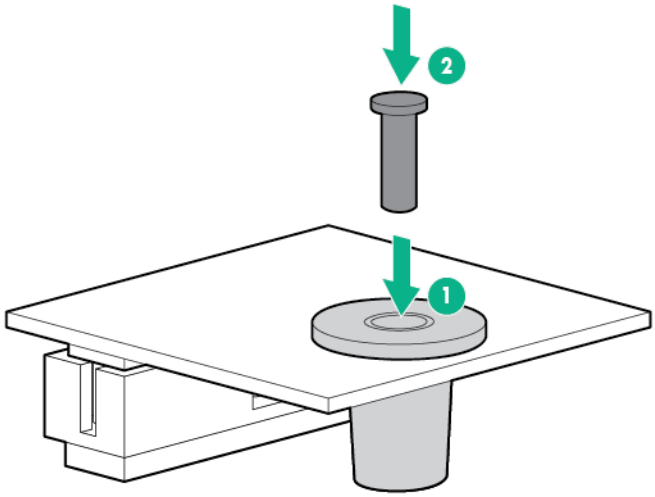

12. Install the front panel/drive cage assembly (on page 23).
13. Install the DIMM baffle ("Install the DIMM baffles" on page 17).
14. Do one of the following:

- Install the storage controller/NVMe pass-through board.
- Install the direct connect SATA cable (on page 19).

15. If removed, install the internal USB drive. To locate the internal USB connector, see "System board components (on page 11)."
16. Install the access panel (on page 16).
17. Install the server blade (on page 28).
18. Power up the server blade (on page 14).

Retaining the recovery key/password

The recovery key/password is generated during BitLocker setup, and can be saved and printed after BitLocker is enabled. When using BitLocker, always retain the recovery key/password. The recovery key/password is required to enter Recovery Mode after BitLocker detects a possible compromise of system integrity.

To help ensure maximum security, observe the following guidelines when retaining the recovery key/password:

- Always store the recovery key/password in multiple locations.
- Always store copies of the recovery key/password away from the server blade.
- Do not save the recovery key/password on the encrypted hard drive.

Enabling the Trusted Platform Module

1. During the server blade startup sequence, press the **F9** key to access System Utilities.
2. From the System Utilities screen, select **System Configuration** > **BIOS/Platform Configuration (RBSU)** > **Server Security**.
3. Select **Trusted Platform Module Options** and press the **Enter** key**.**
4. Select **Enabled** to enable the TPM and BIOS secure startup. The TPM is fully functional in this mode.
5. Press the **F10** key to save your selection.
6. When prompted to save the change in System Utilities, press the **Y** key.
7. Press the **ESC** key to exit System Utilities. Then, press the **Enter** key when prompted to reboot the server blade.

The server blade then reboots a second time without user input. During this reboot, the TPM setting becomes effective.

You can now enable TPM functionality in the OS, such as Microsoft Windows BitLocker or measured boot.

△ **CAUTION:** When a TPM is installed and enabled on the server blade, data access is locked if you fail to follow the proper procedures for updating the system or option firmware, replacing the system board, replacing a hard drive, or modifying OS application TPM settings.

For more information on firmware updates and hardware procedures, see the *HPE Trusted Platform Module Best Practices White Paper* on the Hewlett Packard Enterprise Support Center website (**http://www.hpe.com/support/hpesc**).

For more information on adjusting TPM usage in BitLocker, see the Microsoft website (**http://technet.microsoft.com/en-us/library/cc732774.aspx**).

Cabling

Cabling resources

Cabling configurations and requirements vary depending on the product and installed options. For more information about product features, specifications, options, configurations, and compatibility, see the product QuickSpecs on the Hewlett Packard Enterprise website (**http://www.hpe.com/info/qs**).

HPE Smart Storage Battery cabling

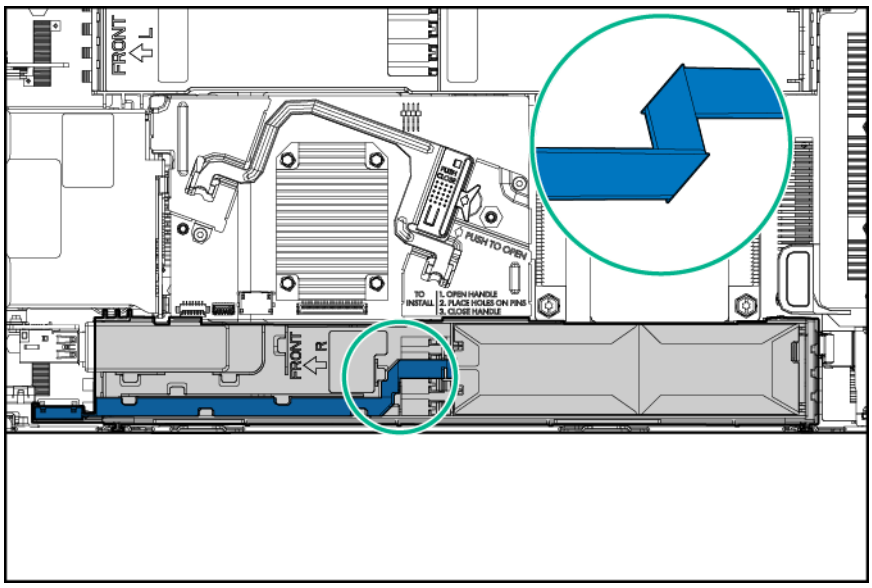

Direct connect SATA cabling

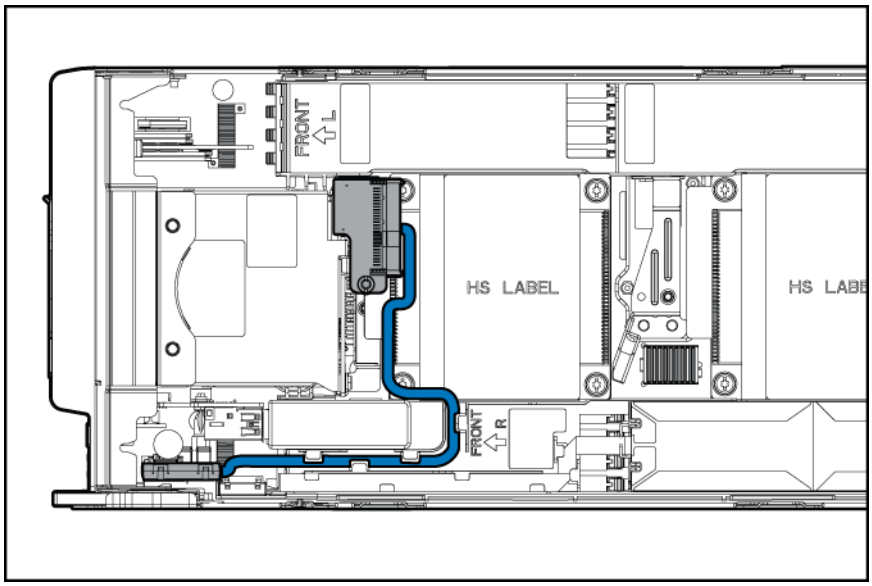

Using the HPE c-Class Blade SUV Cable

The c-Class Blade SUV Cable enables the user to perform server blade administration, configuration, and diagnostic procedures by connecting video and USB devices directly to the server blade. For SUV cable connectors, see "SUV cable connectors (on page 13)."

Connecting locally to a server blade with video and USB devices

Use the SUV cable to connect a monitor and any of the following USB devices:

- USB hub
- USB keyboard
- USB mouse
- USB CD/DVD-ROM drive

Numerous configurations are possible. This section offers two possible configurations. For more information, see "USB support (on page 66)."

Accessing a server blade with local KVM

For this configuration, a USB hub is not necessary. To connect additional devices, use a USB hub.

> △ **CAUTION:** Before disconnecting the SUV cable from the connector, always squeeze the release buttons on the sides of the connector. Failure to do so can result in damage to the equipment.

1. Open the serial label pull tab and connect the c-Class Blade SUV Cable to the server blade.
2. Connect the video connector to a monitor.
3. Connect a USB mouse to one USB connector.
4. Connect a USB keyboard to the second USB connector.

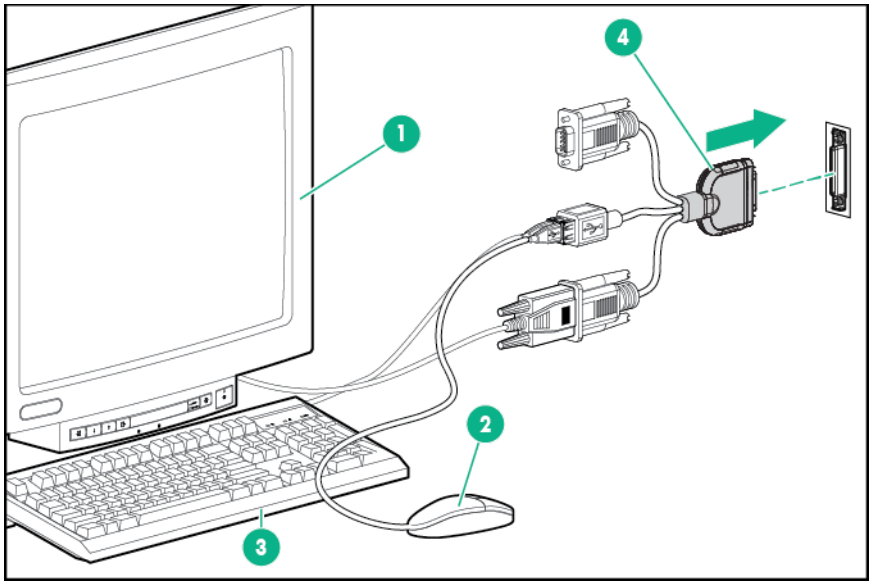

Item	Description
1	Monitor

Item	Description
2	USB mouse
3	USB keyboard
4	c-Class Blade SUV Cable

Accessing local media devices

Use the following configuration when configuring a server blade or loading software updates and patches from a USB CD/DVD-ROM.

Use a USB hub when connecting a USB CD-ROM drive to the server blade. The USB connectors on the SUV cable do not support devices that require greater than a 500mA power source. The USB hub provides additional connections and the power required to support USB keys or external drives that require more than 500mA at 5V.

1. Open the serial label pull tab and connect the c-Class Blade SUV cable to the server blade.
2. Connect the video connector to a monitor.
3. Connect a USB hub to one USB connector.
4. Connect the following to the USB hub:
   - USB CD/DVD-ROM drive
   - USB keyboard
   - USB mouse

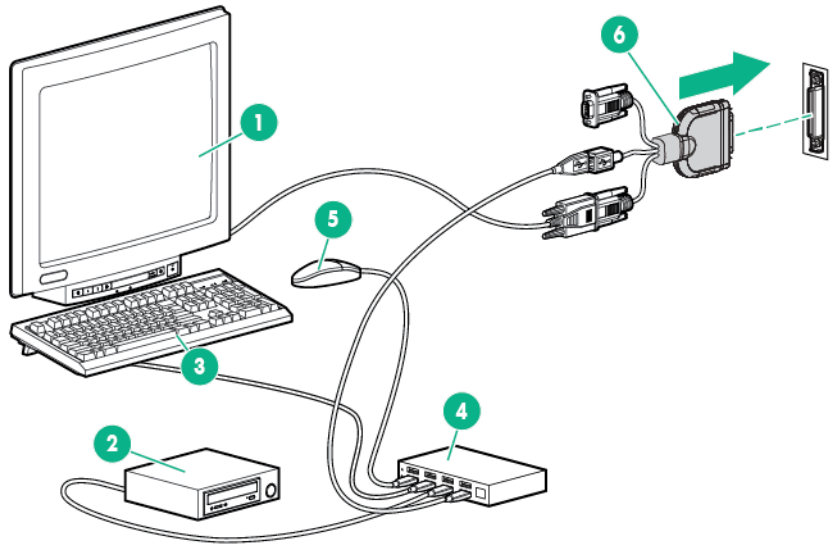

Item	Description
1	Monitor
2	USB CD/DVD-ROM drive
3	USB keyboard
4	USB hub
5	USB mouse
6	c-Class Blade SUV Cable

Troubleshooting

Troubleshooting resources

The *HPE ProLiant Gen9 Troubleshooting Guide, Volume I: Troubleshooting* provides procedures for resolving common problems and comprehensive courses of action for fault isolation and identification, issue resolution, and software maintenance on ProLiant servers and server blades. To view the guide, select a language:

- English (**http://www.hpe.com/support/Gen9_TSG_en**)
- French (**http://www.hpe.com/support/Gen9_TSG_fr**)
- Spanish (**http://www.hpe.com/support/Gen9_TSG_es**)
- German (**http://www.hpe.com/support/Gen9_TSG_de**)
- Japanese (**http://www.hpe.com/support/Gen9_TSG_ja**)
- Simplified Chinese (**http://www.hpe.com/support/Gen9_TSG_zh_cn**)

The *HPE ProLiant Gen9 Troubleshooting Guide, Volume II: Error Messages* provides a list of error messages and information to assist with interpreting and resolving error messages on ProLiant servers and server blades. To view the guide, select a language:

- English (**http://www.hpe.com/support/Gen9_EMG_en**)
- French (**http://www.hpe.com/support/Gen9_EMG_fr**)
- Spanish (**http://www.hpe.com/support/Gen9_EMG_es**)
- German (**http://www.hpe.com/support/Gen9_EMG_de**)
- Japanese (**http://www.hpe.com/support/Gen9_EMG_ja**)
- Simplified Chinese (**http://www.hpe.com/support/Gen9_EMG_zh_cn**)

Software and configuration utilities

Server mode

The software and configuration utilities presented in this section operate in online mode, offline mode, or in both modes.

Software or configuration utility	Server mode
HPE iLO (on page 57)	Online and Offline
Active Health System (on page 57)	Online and Offline
RESTful API support for iLO ("iLO RESTful API support" on page 58)	Online and Offline
Integrated Management Log (on page 58)	Online and Offline
HPE Insight Remote Support (on page 58)	Online
HPE Insight Online ("Insight Online" on page 59)	Online
Intelligent Provisioning (on page 60)	Offline
HPE Insight Diagnostics ("Insight Diagnostics" on page 60)	Online and Offline
Erase Utility (on page 60)	Offline
Scripting Toolkit for Windows and Linux (on page 61)	Online
Service Pack for ProLiant (on page 61)	Online and Offline
Smart Update Manager (on page 61)	Online and Offline
HPE UEFI System Utilities ("UEFI System Utilities" on page 62)	Offline
HPE Smart Storage Administrator (on page 65)	Online and Offline
FWUPDATE utility	Offline

Product QuickSpecs

For more information about product features, specifications, options, configurations, and compatibility, see the product QuickSpecs on the Hewlett Packard Enterprise website (**http://www.hpe.com/info/qs**).

HPE iLO

iLO is a remote server management processor embedded on the system boards of HPE ProLiant and Synergy servers. iLO enables the monitoring and controlling of servers from remote locations. HPE iLO management is a powerful tool that provides multiple ways to configure, update, monitor, and repair servers remotely. iLO (Standard) comes preconfigured on HPE servers **without an additional cost or license**.

Features that enhance server administrator productivity are licensed. For more information, see the iLO documentation on the Hewlett Packard Enterprise website (**http://www.hpe.com/info/ilo-docs**).

Active Health System

The Active Health System monitors and records changes in the server hardware and system configuration.

The Active Health System provides:

- Continuous health monitoring of over 1600 system parameters
- Logging of all configuration changes
- Consolidated health and service alerts with precise time stamps
- Agentless monitoring that does not affect application performance

The Agentless Management Service is available in the SPP, which can be downloaded from the Hewlett Packard Enterprise website (**http://www.hpe.com/servers/spp/download**). The Active Health System log can be downloaded manually from iLO 4 or Intelligent Provisioning and sent to Hewlett Packard Enterprise.

For more information, see the following documents:

- *iLO User Guide* on the Hewlett Packard Enterprise website (**http://www.hpe.com/info/ilo/docs**)
- *Intelligent Provisioning User Guide* on the Hewlett Packard Enterprise website (**http://www.hpe.com/info/intelligentprovisioning/docs**)

iLO RESTful API support

HPE iLO 4 firmware version 2.00 and later includes the iLO RESTful API. The iLO RESTful API is a management interface that server management tools can use to perform configuration, inventory, and monitoring of the ProLiant server via iLO. The iLO RESTful API uses basic HTTPS operations (GET, PUT, POST, DELETE, and PATCH) to submit or return JSON-formatted data with iLO web server.

HPE iLO 4 2.30 and later is Redfish 1.0-conformant while remaining backward compatible with the existing iLO RESTful API.

HPE iLO 4 supports the iLO RESTful API with ProLiant Gen8 and later servers. For more information about the iLO RESTful API, see the Hewlett Packard Enterprise website (**http://www.hpe.com/info/restfulinterface/docs**).

Integrated Management Log

The IML records hundreds of events and stores them in an easy-to-view form. The IML timestamps each event with 1-minute granularity.

You can view recorded events in the IML in several ways, including the following:

- From within HPE SIM
- From within the UEFI System Utilities (on page 62)
- From within the Embedded UEFI shell (on page 64)
- From within operating system-specific IML viewers:
  - For Windows: IML Viewer
  - For Linux: IML Viewer Application
- From within the iLO web interface
- From within Insight Diagnostics (on page 60)

HPE Insight Remote Support

Hewlett Packard Enterprise strongly recommends that you register your device for remote support to enable enhanced delivery of your Hewlett Packard Enterprise warranty, HPE support services, or Hewlett Packard Enterprise contractual support agreement. Insight Remote Support supplements your monitoring continuously to ensure maximum system availability by providing intelligent event diagnosis, and

automatic, secure submission of hardware event notifications to Hewlett Packard Enterprise, which will initiate a fast and accurate resolution, based on your product's service level. Notifications can be sent to your authorized Hewlett Packard Enterprise Channel Partner for onsite service, if configured and available in your country.

For more information, see *Insight Remote Support and Insight Online Setup Guide for ProLiant Servers and BladeSystem c-Class Enclosures* on the Hewlett Packard Enterprise website (**http://www.hpe.com/info/insightremotesupport/docs**). Insight Remote Support is available as part of Hewlett Packard Enterprise Warranty, HPE support services, or Hewlett Packard Enterprise contractual support agreement.

HPE Insight Remote Support central connect

When you use the embedded Remote Support functionality with ProLiant Gen8 and later server models and BladeSystem c-Class enclosures, you can register a server blade or enclosure to communicate to Hewlett Packard Enterprise through an Insight Remote Support centralized Hosting Device in your local environment. All configuration and service event information is routed through the Hosting Device. This information can be viewed by using the local Insight Remote Support user interface or the web-based view in Insight Online.

For more information, see *Insight Remote Support Release Notes* on the Hewlett Packard Enterprise website (**http://www.hpe.com/info/insightremotesupport/docs**).

HPE Insight Online direct connect

When you use the embedded Remote Support functionality with ProLiant Gen8 and later server models and BladeSystem c-Class enclosures, you can register a server blade or enclosure to communicate directly to Insight Online without the need to set up an Insight Remote Support centralized Hosting Device in your local environment. Insight Online will be your primary interface for remote support information.

For more information, see the product documentation on the Hewlett Packard Enterprise website (**http://www.hpe.com/info/insightremotesupport/docs**).

Insight Online

HPE Insight Online is a capability of the Support Center portal. Combined with Insight Remote Support central connect or Insight Online direct connect, it automatically aggregates device health, asset, and support information with contract and warranty information, and then secures it in a single, personalized dashboard that is viewable from anywhere at any time. The dashboard organizes your IT and service data to help you understand and respond to that information more quickly. With specific authorization from you, an authorized Channel Partner can also view your IT environment remotely using Insight Online.

For more information about using Insight Online, see *Insight Online User's Guide* on the Hewlett Packard Enterprise website (**http://www.hpe.com/info/enterprise/docs**).

HPE iLO

iLO is a remote server management processor embedded on the system boards of HPE ProLiant and Synergy servers. iLO enables the monitoring and controlling of servers from remote locations. HPE iLO management is a powerful tool that provides multiple ways to configure, update, monitor, and repair servers remotely. iLO (Standard) comes preconfigured on HPE servers **without an additional cost or license**.

Features that enhance server administrator productivity are licensed. For more information, see the iLO documentation on the Hewlett Packard Enterprise website (**http://www.hpe.com/info/ilo-docs**).

Intelligent Provisioning

Intelligent Provisioning is a single-server deployment tool embedded in ProLiant Gen8 and later servers. Intelligent Provisioning simplifies ProLiant server setup and provides a reliable and consistent way to deploy ProLiant server configurations:

- Intelligent Provisioning prepares the system for installing "off-the-shelf" and Hewlett Packard Enterprise branded versions of operating system software and integrates optimized ProLiant server support software.
- Intelligent Provisioning provides installation help for Microsoft Windows, Red Hat and SUSE Linux, and VMware operating systems. For specific OS support, see the *Intelligent Provisioning Release Notes* on the Hewlett Packard Enterprise website (**http://www.hpe.com/info/intelligentprovisioning/docs**).
- Intelligent Provisioning provides maintenance-related tasks using the Perform Maintenance window.

For more information about Intelligent Provisioning software and recovery media downloads, see the Hewlett Packard Enterprise website (**http://www.hpe.com/servers/intelligentprovisioning**). For consolidated drive and firmware update packages, see the Smart Update: Server Firmware and Driver Updates page on the Hewlett Packard Enterprise website (**http://www.hpe.com/info/SmartUpdate**).

Insight Diagnostics

The Insight Diagnostics is a proactive server blade management tool, available in both offline and online versions. The tool provides diagnostics and troubleshooting capabilities to assist IT administrators who verify server blade installations, troubleshoot problems, and perform repair validation.

The Insight Diagnostics Offline Edition performs various in-depth system and component testing while the OS is not running. To run this utility, boot the server blade using Intelligent Provisioning (on page 60).

The Insight Diagnostics Online Edition is a web-based application that captures system configuration and other related data needed for effective server blade management. Available in Microsoft Windows and Linux versions, the utility helps to ensure proper system operation.

For more information or to download the utility, see the Hewlett Packard Enterprise website (**http://www.hpe.com/info/InsightDiagnostics**). The Insight Diagnostics Online Edition is also available in the SPP ("Service Pack for ProLiant" on page 61).

Insight Diagnostics survey functionality

Insight Diagnostics (on page 60) provides survey functionality that gathers critical hardware and software information on ProLiant server blades.

This functionality supports operating systems that the server blade supports. For operating systems supported by the server blade, see the Hewlett Packard Enterprise website (**http://www.hpe.com/info/supportos**).

If a significant change occurs between data-gathering intervals, the survey function marks the previous information and overwrites the survey data files to reflect the latest changes.

Survey functionality is installed with every Intelligent Provisioning-assisted Insight Diagnostics installation, or it can be installed through the SPP ("Service Pack for ProLiant" on page 61).

Erase Utility

△ **CAUTION:** Perform a backup before running the Erase Utility. The utility completes the following:

- Sets the system to its original factory state
- Deletes the current hardware configuration information, including array setup and disk partitioning
- Erases all connected hard drives completely.

Before using this utility, see the instructions in the *Intelligent Provisioning User Guide*.

Use the Erase Utility to erase drives and Active Health System logs, and to reset UEFI System Utilities settings. Run the Erase Utility if you must erase the system for the following reasons:

- You want to install a new operating system on a server blade with an existing operating system.
- You encounter an error when completing the steps of a factory-installed operating system installation.

To access the Erase Utility, click the Perform Maintenance icon from the Intelligent Provisioning home screen, and then select **Erase**.

For more information about the Erase Utility, see the *Intelligent Provisioning User Guide* on the Hewlett Packard Enterprise website (**http://www.hpe.com/info/intelligentprovisioning/docs**).

Scripting Toolkit for Windows and Linux

The Scripting Toolkit for Windows and Linux is a server deployment product that delivers an unattended automated installation for high-volume server deployments. The Scripting Toolkit is designed to support ProLiant BL, ML, DL, and SL servers. The toolkit includes a modular set of utilities and important documentation that describes how to apply these tools to build an automated server deployment process.

The Scripting Toolkit provides a flexible way to create standard server configuration scripts. These scripts are used to automate many of the manual steps in the server configuration process. This automated server configuration process cuts time from each deployment, making it possible to scale rapid, high-volume server deployments.

For more information, and to download the Scripting Toolkit, see the Hewlett Packard Enterprise website (**http://www.hpe.com/servers/proliant/stk**).

Service Pack for ProLiant

The SPP is a comprehensive systems software (drivers and firmware) solution delivered as a single package with major server releases. This solution uses SUM as the deployment tool and is tested on all supported ProLiant servers including ProLiant Gen8 and later servers.

SPP can be used in an online mode on a Windows or Linux hosted operating system, or in an offline mode where the server is booted to an operating system included on the ISO file so that the server can be updated automatically with no user interaction or updated in interactive mode.

For more information or to download SPP, see one of the following pages on the Hewlett Packard Enterprise website:

- Service Pack for ProLiant download page (**http://www.hpe.com/servers/spp/download**)
- Smart Update: Server Firmware and Driver Updates page (**http://www.hpe.com/info/SmartUpdate**)

Smart Update Manager

SUM is a product used to install and update firmware, drivers, and systems software on ProLiant servers. The SUM provides a GUI and a command-line scriptable interface for deployment of systems

software for single or one-to-many ProLiant servers and network-based targets, such as iLOs, OAs, and VC Ethernet and Fibre Channel modules.

For more information about SUM, see the product page on the Hewlett Packard Enterprise website (**http://www.hpe.com/servers/sum**).

To download SUM, see the Hewlett Packard Enterprise website (**http://www.hpe.com/servers/sum-download**).

To access the *Smart Update Manager User Guide*, see the SUM Information Library (**http://www.hpe.com/info/sum-docs**).

UEFI System Utilities

The UEFI System Utilities is embedded in the system ROM. The UEFI System Utilities enable you to perform a wide range of configuration activities, including:

- Configuring system devices and installed options
- Enabling and disabling system features
- Displaying system information
- Selecting the primary boot controller
- Configuring memory options
- Selecting a language
- Launching other preboot environments such as the Embedded UEFI Shell and Intelligent Provisioning

For more information, see the UEFI System Utilities user guide for your product on the Hewlett Packard Enterprise website (**http://www.hpe.com/info/UEFI/docs**).

To access mobile-ready online help for the UEFI System Utilities and UEFI Shell, scan the QR code at the bottom of the screen. For on-screen help, press the **F1** key.

Using UEFI System Utilities

To use the System Utilities, use the following keys.

Action	Key
Access System Utilities	F9 during server POST
Navigate menus	Up and Down arrows
Select items	Enter
Save selections	F10
Access Help for a highlighted configuration option*	F1

*Scan the QR code on the screen to access online help for the UEFI System Utilities and UEFI Shell.

Default configuration settings are applied to the server at one of the following times:

- Upon the first system power-up
- After defaults have been restored

Default configuration settings are sufficient for typical server operations; however, you can modify configuration settings as needed. The system prompts you for access to the UEFI System Utilities each time the system is powered up.

Flexible boot control

This feature enables you to do the following:

- Add Boot Options:
  - Browse all FAT16 and FAT32 file systems.
  - To add a new UEFI boot option, select an X64 UEFI application with an .EFI extension. For example, adding an OS boot loader or other UEFI application as a new UEFI boot option.

    The new boot option is appended to the boot-order list. When you select a file, you are prompted to enter the boot option description. This description, and any optional data to be passed to an .EFI application, is then displayed in the boot menu.
- Boot to System Utilities

  After pre-POST, the boot options screen appears. During this time, you can access the UEFI System Utilities by pressing the **F9** key.
- Choose between supported modes:
  - Legacy BIOS Boot Mode
  - UEFI Boot Mode

IMPORTANT: If the default boot mode settings are different than the user-defined settings, the system may not boot the OS installation if the defaults are restored. To avoid this issue, use the User Defined Defaults feature in UEFI System Utilities to override the factory default settings.

For more information, see the UEFI System Utilities user guide for your product on the Hewlett Packard Enterprise website (**http://www.hpe.com/info/UEFI/docs**).

Restoring and customizing configuration settings

You can reset all configuration settings to the factory default settings, or you can restore and use the system default configuration settings.

You can also configure default settings as necessary, and then save the configuration as the custom default configuration. When the system loads the default settings, it uses the custom default settings instead of the factory defaults.

Secure Boot configuration

Secure Boot is integrated in the UEFI specification on which the Hewlett Packard Enterprise implementation of UEFI is based. Secure Boot is implemented in the BIOS and does not require special hardware. Secure Boot ensures that each component launched during the boot process is digitally signed. Secure Boot also ensures that the signature is validated against a set of trusted certificates embedded in the UEFI BIOS. Secure Boot validates the software identity of the following components in the boot process:

- UEFI drivers loaded from PCIe cards
- UEFI drivers loaded from mass storage devices
- Preboot UEFI shell applications
- OS UEFI boot loaders

Once enabled, only firmware components and operating systems with boot loaders that have an appropriate digital signature can execute during the boot process. Only operating systems that support Secure Boot and have an EFI boot loader signed with one of the authorized keys can boot. For more information about supported operating systems, see the UEFI System Utilities and Shell release notes for your server blade on the Hewlett Packard Enterprise website (**http://www.hpe.com/info/UEFI/docs**).

A physically present user can customize the certificates embedded in the UEFI BIOS by adding or removing their own certificates.

When Secure Boot is enabled, the System Maintenance Switch does not restore all manufacturing defaults when set to the ON position. For security reasons, the following are not restored to defaults when the System Maintenance Switch is in the ON position:

- Secure Boot is not disabled and remains enabled.
- The Boot Mode remains in UEFI Boot Mode even if the default boot mode is Legacy Boot Mode.
- The Secure Boot Database is not restored to its default state.
- iSCSI Software Initiator configuration settings are not restored to defaults.

Embedded UEFI shell

The system BIOS in all ProLiant Gen9 servers includes an Embedded UEFI Shell in the ROM. The UEFI Shell environment provides an API, a command-line prompt, and a set of CLIs that allow scripting, file manipulation, and system information. These features enhance the capabilities of the UEFI System Utilities.

For more information, see the following documents:

- *UEFI Shell User Guide for HPE ProLiant Gen9 Servers* on the Hewlett Packard Enterprise website (**http://www.hpe.com/info/UEFI/docs**)
- *UEFI Shell Specification* on the UEFI website (**http://www.uefi.org/specifications**)

Embedded Diagnostics option

The system BIOS in all ProLiant Gen9 servers includes an Embedded Diagnostics option in the ROM. The Embedded Diagnostics option can run comprehensive diagnostics of the server hardware, including processors, memory, drives, and other server components.

For more information on the Embedded Diagnostics option, see the UEFI System Utilities user guide for your server blade on the Hewlett Packard Enterprise website (**http://www.hpe.com/info/UEFI/docs**).

iLO RESTful API support for UEFI

The ProLiant Gen9 servers include support for a UEFI-compliant System BIOS, along with UEFI System Utilities and Embedded UEFI Shell preboot environments. ProLiant Gen9 servers also support configuring the UEFI BIOS settings using the iLO RESTful API, a management interface that server management tools can use to perform configuration, inventory, and monitoring of a ProLiant server. The iLO RESTful API uses basic HTTPS operations (GET, PUT, POST, DELETE, and PATCH) to submit or return JSON-formatted data with iLO web server.

For more information about the iLO RESTful API and the RESTful Interface Tool, see the Hewlett Packard Enterprise website (**http://www.hpe.com/info/restfulinterface/docs**).

Re-entering the server serial number and product ID

After you replace the system board, you must re-enter the server blade serial number and the product ID:

1. During the server blade startup sequence, press the **F9** key to access UEFI System Utilities.
2. Select **System Configuration** > **BIOS/Platform Configuration (RBSU)** > **Advanced Options** > **Advanced System ROM Options** > **Serial Number**, and then press the **Enter** key.
3. Enter the serial number and press the **Enter** key.

   The following message appears:

```
The serial number should only be modified by qualified service personnel.
This value should always match the serial number located on the chassis.
```

4. To clear the warning, press the **Enter** key.
5. Enter the serial number and press the **Enter** key.
6. Select **Product ID**.

   The following warning appears:

   ```
   Warning: The Product ID should ONLY be modified by qualified service
   personnel. This value should always match the Product ID located on the
   chassis.
   ```
7. Enter the product ID and press the **Enter** key.
8. To confirm exiting System Utilities, press the **F10** key.

   The server blade automatically reboots.

Utilities and features

HPE Smart Storage Administrator

The HPE SSA is a configuration and management tool for HPE Smart Array controllers. Starting with HPE ProLiant Gen8 servers, HPE SSA replaces ACU with an enhanced GUI and additional configuration features.

The HPE SSA exists in three interface formats: the HPE SSA GUI, the HPE SSA CLI, and HPE SSA Scripting. Although all formats provide support for configuration tasks, some of the advanced tasks are available in only one format.

Some HPE SSA features include the following:

- Supports online array capacity expansion, logical drive extension, assignment of online spares, and RAID or stripe size migration
- Provides diagnostic and SmartSSD Wear Gauge functionality on the Diagnostics tab
- For supported controllers, provides access to additional features.

For more information about HPE SSA, see the Hewlett Packard Enterprise website (**http://www.hpe.com/servers/ssa**).

ROMPaq utility

The ROMPaq utility enables you to upgrade the system firmware (BIOS). To upgrade the firmware, insert a ROMPaq USB Key into an available USB port and boot the system. In addition to ROMPaq, Online Flash Components for Windows and Linux operating systems are available for updating the system firmware.

The ROMPaq utility checks the system and provides a choice (if more than one exists) of available firmware revisions.

To locate the drivers for a particular server, go to the Hewlett Packard Enterprise website (**http://www.hpe.com/support/hpesc**). Under **Select your HPE product**, enter the product name or number and click **Go**.

Automatic Server Recovery

ASR is a feature that causes the system to restart when a catastrophic operating system error occurs, such as a blue screen, ABEND, or panic. A system fail-safe timer, the ASR timer, starts when the System Management driver, also known as the Health Driver, is loaded. When the operating system is functioning

properly, the system periodically resets the timer. However, when the operating system fails, the timer expires and restarts the server.

ASR increases server availability by restarting the server within a specified time after a system hang. You can disable ASR from the System Management Homepage or through UEFI System Utilities.

USB support

Hewlett Packard Enterprise server blades support both USB 2.0 ports and USB 3.0 ports. Both port types support installing all types of USB devices (USB 1.0, USB 2.0, and USB 3.0), but might run at lower speeds in specific situations:

- USB 3.0 capable devices operate at USB 2.0 speeds when installed in a USB 2.0 port.
- In UEFI Boot Mode, Hewlett Packard Enterprise provides legacy USB support in the preboot environment before the operating system loading for USB 1.0, USB 2.0, and USB 3.0 speeds.
- In Legacy BIOS Boot Mode, Hewlett Packard Enterprise provides legacy USB support in the preboot environment before the operating system loading for USB 1.0 and USB 2.0 speeds. USB 3.0 ports can be used with all devices in Legacy BIOS Boot Mode but are not available at USB 3.0 speeds in the preboot environment. Standard USB support (USB support from within the operating system) is provided by the OS through the appropriate USB device drivers. Support for USB 3.0 varies by operating system.

For maximum compatibility of USB 3.0 devices with all operating systems, Hewlett Packard Enterprise provides a configuration setting for USB 3.0 Mode. Auto is the default setting. This setting impacts USB 3.0 devices when connected to USB 3.0 ports in the following manner:

- **Auto (default)**—If configured in Auto Mode, USB 3.0 capable devices operate at USB 2.0 speeds in the preboot environment and during boot. When a USB 3.0 capable OS USB driver loads, USB 3.0 devices transition to USB 3.0 speeds. This mode is compatible with operating systems that do not support USB 3.0 while allowing USB 3.0 devices to operate at USB 3.0 speeds with state-of-the-art operating systems.
- **Enabled**—If Enabled, USB 3.0 capable devices operate at USB 3.0 speeds at all times (including the preboot environment) when in UEFI Boot Mode. Do not use this mode with operating systems that do not support USB 3.0. If operating in Legacy Boot BIOS Mode, the USB 3.0 ports cannot function in the preboot environment and are not bootable.
- **Disabled**—If configured for Disabled, USB 3.0 capable devices function at USB 2.0 speeds at all times.

The pre-OS behavior and default operation of the USB ports is configurable in the UEFI System Utilities. For more information, see the UEFI System Utilities user guide for your product on the Hewlett Packard Enterprise website (**http://www.hpe.com/info/UEFI/docs**).

External USB functionality

Hewlett Packard Enterprise provides external USB support to enable local connection of USB devices for server blade administration, configuration, and diagnostic procedures.

For additional security, external USB functionality can be disabled through USB options in UEFI System Utilities.

Redundant ROM support

The server blade enables you to upgrade or configure the ROM safely with redundant ROM support. The server blade has a single ROM that acts as two separate ROM images. In the standard implementation, one side of the ROM contains the current ROM program version, while the other side of the ROM contains a backup version.

NOTE: The server ships with the same version programmed on each side of the ROM.

Safety and security benefits

When you flash the system ROM, ROMPaq writes over the backup ROM and saves the current ROM as a backup, enabling you to switch easily to the alternate ROM version if the new ROM becomes corrupted for any reason. This feature protects the existing ROM version, even if you experience a power failure while flashing the ROM.

Keeping the system current

Drivers

IMPORTANT: Always perform a backup before installing or updating device drivers.

The server blade includes new hardware that may not have driver support on all OS installation media.

If you are installing an Intelligent Provisioning-supported OS, use Intelligent Provisioning (on page 60) and its Configure and Install feature to install the OS and latest supported drivers.

If you do not use Intelligent Provisioning to install an OS, drivers for some of the new hardware are required. These drivers, as well as other option drivers, ROM images, and value-add software can be downloaded as part of an SPP.

If you are installing drivers from SPP, be sure that you are using the latest SPP version that your server blade supports. To verify that your server blade is using the latest supported version and for more information about SPP, see the Hewlett Packard Enterprise website (**http://www.hpe.com/servers/spp/download**).

To locate the drivers for a particular server, go to the Hewlett Packard Enterprise Support Center website (**http://www.hpe.com/support/hpesc**). Under **Select your HPE product**, enter the product name or number and click **Go**.

Software and firmware

Update software and firmware before using the server blade for the first time, unless any installed software or components require an older version.

For system software and firmware updates, use one of the following sources:

- Download the SPP ("Service Pack for ProLiant" on page 61) from the Hewlett Packard Enterprise website (**http://www.hpe.com/servers/spp/download**).
- Download individual drivers, firmware, or other systems software components from the server blade product page in the Hewlett Packard Enterprise Support Center website (**http://www.hpe.com/support/hpesc**).

Version control

The VCRM and VCA are web-enabled Insight Management Agents tools that SIM uses to schedule software update tasks to the entire enterprise.

- VCRM manages the repository for SPP. Administrators can do the following:
  - View the SPP contents

    - Configure VCRM to update the repository automatically with internet downloads of the latest software and firmware from Hewlett Packard Enterprise
- VCA compares installed software versions on the node with updates available in the VCRM managed repository. Administrators configure VCA to point to a repository managed by VCRM.

For more information about version control tools, see the following documents on the Hewlett Packard Enterprise website (**http://www.hpe.com/info/enterprise/docs**):

- *Systems Insight Manager User Guide*
- *Version Control Agent User Guide*
- *Version Control Repository Manager User Guide*

To locate the documents, do the following:

1. Select **Insight Management** from the available options in Products and Solutions.
2. Select **Version Control** from the available options in Models / Subcategories.
3. Locate and download the latest document.

Operating systems and virtualization software support for ProLiant servers

For information about specific versions of a supported operating system, see the Hewlett Packard Enterprise website (**http://www.hpe.com/info/ossupport**).

HPE Technology Service Portfolio

HPE Technology Services deliver confidence, reduces risk and helps customers realize agility and stability. We help customers succeed through Hybrid IT by simplifying and enriching the on-premise experience, informed by public cloud qualities and attributes. HPE Support Services enables you to choose the right service level, length of coverage and response time to fit your business needs. Connect to HPE to help prevent problems and solve issues faster. By connecting, you will receive 24x7 monitoring, prefailure alerts, automatic call logging, and automatic parts dispatch. To learn more about getting connected, see the Hewlett Packard Enterprise website (**http://www.hpe.com/services/getconnected**).

For more information about support services, see the Hewlett Packard Enterprise website (**http://www.hpe.com/services/support**).

Utilize our consulting expertise in the following areas:

- Private or hybrid cloud computing
- Big data and mobility requirements
- Improving data center infrastructure
- Better use of server, storage, and networking technology

For more information, see the Hewlett Packard Enterprise website (**http://www.hpe.com/services/consulting**).

Change control and proactive notification

Hewlett Packard Enterprise offers Change Control and Proactive Notification to notify customers 30 to 60 days in advance of the following:

- Upcoming hardware and software changes
- Bulletins
- Patches

Let us know what Hewlett Packard Enterprise commercial products you own and we will send you the latest updates to keep your business running smoothly.

For more information, see the Hewlett Packard Enterprise website (**http://www.hpe.com/info/pcn**).

System battery replacement

If the server blade no longer automatically displays the correct date and time, then replace the battery that provides power to the real-time clock. Under normal use, battery life is 5 to 10 years.

WARNING: The computer contains an internal lithium manganese dioxide, a vanadium pentoxide, or an alkaline battery pack. A risk of fire and burns exists if the battery pack is not properly handled. To reduce the risk of personal injury:

- Do not attempt to recharge the battery.
- Do not expose the battery to temperatures higher than 60°C (140°F).
- Do not disassemble, crush, puncture, short external contacts, or dispose of in fire or water.
- Replace only with the spare designated for this product.

To remove the component:

1. Power down the server blade (on page 14).
2. Remove the server blade (on page 15).
3. Place the server blade on a flat, level work surface.
4. Remove the access panel (on page 15).
5. Identify the battery location ("System board components" on page 11).
6. If installed, remove the direct connect SATA cable ("Remove the direct connect SATA cable" on page 19).
7. If installed, remove the internal USB drive. To locate the internal USB connector, see "System board components (on page 11)."
8. Remove the front panel/drive cage assembly (on page 24).
9. Remove the M.2 SSD module.
10. Remove the battery.

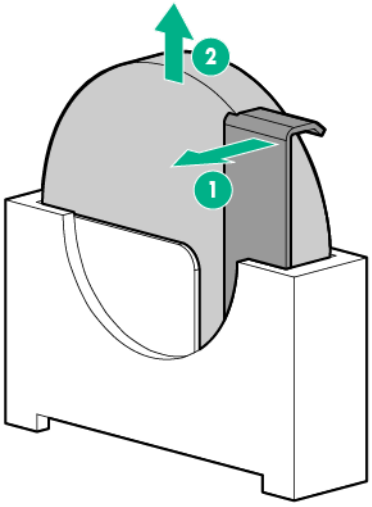

IMPORTANT: Replacing the system board battery resets the system ROM to its default configuration. After replacing the battery, reconfigure the system through UEFI System Utilities.

To replace the component, reverse the removal procedure.

For more information about battery replacement or proper disposal, contact an authorized reseller or an authorized service provider.

Regulatory information

Safety and regulatory compliance

For important safety, environmental, and regulatory information, see *Safety and Compliance Information for Server, Storage, Power, Networking, and Rack Products*, available at the Hewlett Packard Enterprise website (**http://www.hpe.com/support/Safety-Compliance-EnterpriseProducts**).

Belarus Kazakhstan Russia marking



Manufacturer and Local Representative Information

Manufacturer information:

Hewlett Packard Enterprise Company, 3000 Hanover Street, Palo Alto, CA 94304 U.S.

Local representative information Russian:

- **Russia:**

  ООО «Хьюлетт Паккард Энтерпрайз», Российская Федерация, 125171, г. Москва, Ленинградское шоссе, 16А, стр.3, Телефон/факс: +7 495 797 35 00

- **Belarus:**

  ИООО «Хьюлетт-Паккард Бел», Республика Беларусь, 220030, г. Минск, ул. Интернациональная, 36-1, Телефон/факс: +375 17 392 28 18

- **Kazakhstan:**

  ТОО «Хьюлетт-Паккард (К)», Республика Казахстан, 050040, г. Алматы, Бостандыкский район, проспект Аль-Фараби, 77/7, Телефон/факс: + 7 727 355 35 50

Local representative information Kazakh:

- **Russia:**

  ЖШС "Хьюлетт Паккард Энтерпрайз" Ресей Федерациясы, 125171, Мәскеу, Ленинград тас жолы, 16А блок 3, Телефон/факс: +7 495 797 35 00

- **Belarus:**

  «HEWLETT-PACKARD Bel» ЖШС, Беларусь Республикасы, 220030, Минск қ., Интернациональная көшесі, 36/1, Телефон/факс: +375 17 392 28 18

- **Kazakhstan:**

ЖШС «Хьюлетт-Паккард (К)», Қазақстан Республикасы, 050040, Алматы к., Бостандық ауданы, Әл-Фараби даңғ ылы, 77/7, Телефон/факс: +7 727 355 35 50

Manufacturing date:

The manufacturing date is defined by the serial number.

CCSYWWZZZZ (serial number format for this product)

Valid date formats include:

- YWW, where Y indicates the year counting from within each new decade, with 2000 as the starting point; for example, 238: 2 for 2002 and 38 for the week of September 9. In addition, 2010 is indicated by 0, 2011 by 1, 2012 by 2, 2013 by 3, and so forth.
- YYWW, where YY indicates the year, using a base year of 2000; for example, 0238: 02 for 2002 and 38 for the week of September 9.

Turkey RoHS material content declaration

Türkiye Cumhuriyeti: EEE Yönetmeliğine Uygundur

Ukraine RoHS material content declaration

Обладнання відповідає вимогам Технічного регламенту щодо обмеження використання деяких небезпечних речовин в електричному та електронному обладнанні, затвердженого постановою Кабінету Міністрів України від 3 грудня 2008 № 1057

Warranty information

HPE ProLiant and x86 Servers and Options (**http://www.hpe.com/support/ProLiantServers-Warranties**)

HPE Enterprise Servers (**http://www.hpe.com/support/EnterpriseServers-Warranties**)

HPE Storage Products (**http://www.hpe.com/support/Storage-Warranties**)

HPE Networking Products (**http://www.hpe.com/support/Networking-Warranties**)

Electrostatic discharge

Preventing electrostatic discharge

To prevent damaging the system, be aware of the precautions you must follow when setting up the system or handling parts. A discharge of static electricity from a finger or other conductor may damage system boards or other static-sensitive devices. This type of damage may reduce the life expectancy of the device.

To prevent electrostatic damage:

- Avoid hand contact by transporting and storing products in static-safe containers.
- Keep electrostatic-sensitive parts in their containers until they arrive at static-free workstations.
- Place parts on a grounded surface before removing them from their containers.
- Avoid touching pins, leads, or circuitry.
- Always be properly grounded when touching a static-sensitive component or assembly.

Grounding methods to prevent electrostatic discharge

Several methods are used for grounding. Use one or more of the following methods when handling or installing electrostatic-sensitive parts:

- Use a wrist strap connected by a ground cord to a grounded workstation or computer chassis. Wrist straps are flexible straps with a minimum of 1 megohm ±10 percent resistance in the ground cords. To provide proper ground, wear the strap snug against the skin.
- Use heel straps, toe straps, or boot straps at standing workstations. Wear the straps on both feet when standing on conductive floors or dissipating floor mats.
- Use conductive field service tools.
- Use a portable field service kit with a folding static-dissipating work mat.

If you do not have any of the suggested equipment for proper grounding, have an authorized reseller install the part.

For more information on static electricity or assistance with product installation, contact an authorized reseller.

Specifications

Environmental specifications

Specification	Value
Temperature range*	—
Operating	10°C to 35°C (50°F to 95°F)
Non-operating	-30°C to 60°C (-22°F to 140°F)
Relative humidity (noncondensing)**	—
Operating	10% to 90% @ 28°C (82.4°F)
Non-operating	5% to 95% @ 38.7°C (101.7°F)
Altitude†	—
Operating	3050 m (10,000 ft)
Non-operating	9144 m (30,000 ft)

* The following temperature conditions and limitations apply:
  - All temperature ratings shown are for sea level.
  - An altitude derating of 1°C per 304.8 m (1.8°F per 1,000 ft) up to 3048 m (10,000 ft) applies.
  - No direct sunlight is allowed.
  - The maximum permissible rate of change is 10°C/hr (18°F/hr).
  - The type and number of options installed might reduce the upper temperature and humidity limits.
  - Operating with a fan fault or above 30°C (86°F) might reduce system performance.

** Storage maximum humidity of 95% is based on a maximum temperature of 45°C (113°F).

† Maximum storage altitude corresponds to a minimum pressure of 70 kPa (10.1 psia).

Server blade specifications

Specification	Value
Height	180.70 mm (7.11 in)
Depth	517.51mm (20.37 in)
Width	55.37 mm (2.18 in)
Weight (maximum)	6.33 kg (13.96 lb)
Weight (minimum)	4.50 kg (9.90 lb)

Support and other resources

Accessing Hewlett Packard Enterprise Support

- For live assistance, go to the Contact Hewlett Packard Enterprise Worldwide website (**http://www.hpe.com/assistance**).
- To access documentation and support services, go to the Hewlett Packard Enterprise Support Center website (**http://www.hpe.com/support/hpesc**).

Information to collect

- Technical support registration number (if applicable)
- Product name, model or version, and serial number
- Operating system name and version
- Firmware version
- Error messages
- Product-specific reports and logs
- Add-on products or components
- Third-party products or components

Accessing updates

- Some software products provide a mechanism for accessing software updates through the product interface. Review your product documentation to identify the recommended software update method.
- To download product updates, go to either of the following:
  - Hewlett Packard Enterprise Support Center Get connected with updates page (**http://www.hpe.com/support/e-updates**)
  - Software Depot website (**http://www.hpe.com/support/softwaredepot**)
- To view and update your entitlements, and to link your contracts and warranties with your profile, go to the Hewlett Packard Enterprise Support Center More Information on Access to Support Materials page (**http://www.hpe.com/support/AccessToSupportMaterials**).

IMPORTANT: Access to some updates might require product entitlement when accessed through the Hewlett Packard Enterprise Support Center. You must have an HPE Passport set up with relevant entitlements.

Websites

- Hewlett Packard Enterprise Information Library (**http://www.hpe.com/info/enterprise/docs**)
- Hewlett Packard Enterprise Support Center (**http://www.hpe.com/support/hpesc**)
- Contact Hewlett Packard Enterprise Worldwide (**http://www.hpe.com/assistance**)

- Subscription Service/Support Alerts (**http://www.hpe.com/support/e-updates**)
- Software Depot (**http://www.hpe.com/support/softwaredepot**)
- Customer Self Repair (**http://www.hpe.com/support/selfrepair**)
- Insight Remote Support (**http://www.hpe.com/info/insightremotesupport/docs**)
- Serviceguard Solutions for HP-UX (**http://www.hpe.com/info/hpux-serviceguard-docs**)
- Single Point of Connectivity Knowledge (SPOCK) Storage compatibility matrix (**http://www.hpe.com/storage/spock**)
- Storage white papers and analyst reports (**http://www.hpe.com/storage/whitepapers**)

Customer Self Repair

Hewlett Packard Enterprise products are designed with many Customer Self Repair (CSR) parts to minimize repair time and allow for greater flexibility in performing defective parts replacement. If during the diagnosis period Hewlett Packard Enterprise (or Hewlett Packard Enterprise service providers or service partners) identifies that the repair can be accomplished by the use of a CSR part, Hewlett Packard Enterprise will ship that part directly to you for replacement. There are two categories of CSR parts:

- **Mandatory**—Parts for which customer self repair is mandatory. If you request Hewlett Packard Enterprise to replace these parts, you will be charged for the travel and labor costs of this service.
- **Optional**—Parts for which customer self repair is optional. These parts are also designed for customer self repair. If, however, you require that Hewlett Packard Enterprise replace them for you, there may or may not be additional charges, depending on the type of warranty service designated for your product.

NOTE: Some Hewlett Packard Enterprise parts are not designed for customer self repair. In order to satisfy the customer warranty, Hewlett Packard Enterprise requires that an authorized service provider replace the part. These parts are identified as "No" in the Illustrated Parts Catalog.

Based on availability and where geography permits, CSR parts will be shipped for next business day delivery. Same day or four-hour delivery may be offered at an additional charge where geography permits. If assistance is required, you can call the Hewlett Packard Enterprise Support Center and a technician will help you over the telephone. Hewlett Packard Enterprise specifies in the materials shipped with a replacement CSR part whether a defective part must be returned to Hewlett Packard Enterprise. In cases where it is required to return the defective part to Hewlett Packard Enterprise, you must ship the defective part back to Hewlett Packard Enterprise within a defined period of time, normally five (5) business days. The defective part must be returned with the associated documentation in the provided shipping material. Failure to return the defective part may result in Hewlett Packard Enterprise billing you for the replacement. With a customer self repair, Hewlett Packard Enterprise will pay all shipping and part return costs and determine the courier/carrier to be used.

For more information about the Hewlett Packard Enterprise CSR program, contact your local service provider. For the North American program, go to the Hewlett Packard Enterprise CSR website (**http://www.hpe.com/support/selfrepair**).

Réparation par le client (CSR)

Les produits Hewlett Packard Enterprise comportent de nombreuses pièces CSR (Customer Self Repair = réparation par le client) afin de minimiser les délais de réparation et faciliter le remplacement des pièces défectueuses. Si pendant la période de diagnostic, Hewlett Packard Enterprise (ou ses partenaires ou mainteneurs agréés) détermine que la réparation peut être effectuée à l'aide d'une pièce CSR, Hewlett Packard Enterprise vous l'envoie directement. Il existe deux catégories de pièces CSR :

- **Obligatoire—**Pièces pour lesquelles la réparation par le client est obligatoire. Si vous demandez à Hewlett Packard Enterprise de remplacer ces pièces, les coûts de déplacement et main d'œuvre du service vous seront facturés.
- **Facultatif**—Pièces pour lesquelles la réparation par le client est facultative. Ces pièces sont également conçues pour permettre au client d'effectuer lui-même la réparation. Toutefois, si vous demandez à Hewlett Packard Enterprise de remplacer ces pièces, l'intervention peut ou non vous être facturée, selon le type de garantie applicable à votre produit.

REMARQUE: Certaines pièces Hewlett Packard Enterprise ne sont pas conçues pour permettre au client d'effectuer lui-même la réparation. Pour que la garantie puisse s'appliquer, Hewlett Packard Enterprise exige que le remplacement de la pièce soit effectué par un Mainteneur Agréé. Ces pièces sont identifiées par la mention "Non" dans le Catalogue illustré.

Les pièces CSR sont livrées le jour ouvré suivant, dans la limite des stocks disponibles et selon votre situation géographique. Si votre situation géographique le permet et que vous demandez une livraison le jour même ou dans les 4 heures, celle-ci vous sera facturée. Pour toute assistance, appelez le Centre d’assistance Hewlett Packard Enterprise pour qu’un technicien vous aide au téléphone. Dans les documents envoyés avec la pièce de rechange CSR, Hewlett Packard Enterprise précise s'il est nécessaire de lui retourner la pièce défectueuse. Si c'est le cas, vous devez le faire dans le délai indiqué, généralement cinq (5) jours ouvrés. La pièce et sa documentation doivent être retournées dans l'emballage fourni. Si vous ne retournez pas la pièce défectueuse, Hewlett Packard Enterprise se réserve le droit de vous facturer les coûts de remplacement. Dans le cas d'une pièce CSR, Hewlett Packard Enterprise supporte l'ensemble des frais d'expédition et de retour, et détermine la société de courses ou le transporteur à utiliser.

Pour plus d'informations sur le programme CSR de Hewlett Packard Enterprise, contactez votre Mainteneur Agrée local. Pour plus d'informations sur ce programme en Amérique du Nord, consultez le site Web Hewlett Packard Enterprise (**http://www.hpe.com/support/selfrepair**).

Riparazione da parte del cliente

Per abbreviare i tempi di riparazione e garantire una maggiore flessibilità nella sostituzione di parti difettose, i prodotti Hewlett Packard Enterprise sono realizzati con numerosi componenti che possono essere riparati direttamente dal cliente (CSR, Customer Self Repair). Se in fase di diagnostica Hewlett Packard Enterprise (o un centro di servizi o di assistenza Hewlett Packard Enterprise) identifica il guasto come riparabile mediante un ricambio CSR, Hewlett Packard Enterprise lo spedirà direttamente al cliente per la sostituzione. Vi sono due categorie di parti CSR:

- **Obbligatorie—**Parti che devono essere necessariamente riparate dal cliente. Se il cliente ne affida la riparazione ad Hewlett Packard Enterprise, deve sostenere le spese di spedizione e di manodopera per il servizio.
- **Opzionali—**Parti la cui riparazione da parte del cliente è facoltativa. Si tratta comunque di componenti progettati per questo scopo. Se tuttavia il cliente ne richiede la sostituzione ad Hewlett Packard Enterprise, potrebbe dover sostenere spese addizionali a seconda del tipo di garanzia previsto per il prodotto.

NOTA: alcuni componenti Hewlett Packard Enterprise non sono progettati per la riparazione da parte del cliente. Per rispettare la garanzia, Hewlett Packard Enterprise richiede che queste parti siano sostituite da un centro di assistenza autorizzato. Tali parti sono identificate da un "No" nel Catalogo illustrato dei componenti.

In base alla disponibilità e alla località geografica, le parti CSR vengono spedite con consegna entro il giorno lavorativo seguente. La consegna nel giorno stesso o entro quattro ore è offerta con un supplemento di costo solo in alcune zone. In caso di necessità si può richiedere l'assistenza telefonica di un addetto del centro di supporto tecnico Hewlett Packard Enterprise. Nel materiale fornito con una parte di ricambio CSR, Hewlett Packard Enterprise specifica se il cliente deve restituire dei component. Qualora sia richiesta la resa ad Hewlett Packard Enterprise del componente difettoso, lo si deve spedire ad Hewlett Packard Enterprise entro un determinato periodo di tempo, generalmente cinque (5) giorni lavorativi. Il componente difettoso deve essere restituito con la documentazione associata nell'imballo di

spedizione fornito. La mancata restituzione del componente può comportare la fatturazione del ricambio da parte di Hewlett Packard Enterprise. Nel caso di riparazione da parte del cliente, Hewlett Packard Enterprise sostiene tutte le spese di spedizione e resa e sceglie il corriere/vettore da utilizzare.

Per ulteriori informazioni sul programma CSR di Hewlett Packard Enterprise, contattare il centro di assistenza di zona. Per il programma in Nord America fare riferimento al sito Web (**http://www.hpe.com/support/selfrepair**).

Customer Self Repair

Hewlett Packard Enterprise Produkte enthalten viele CSR-Teile (Customer Self Repair), um Reparaturzeiten zu minimieren und höhere Flexibilität beim Austausch defekter Bauteile zu ermöglichen. Wenn Hewlett Packard Enterprise (oder ein Hewlett Packard Enterprise Servicepartner) bei der Diagnose feststellt, dass das Produkt mithilfe eines CSR-Teils repariert werden kann, sendet Ihnen Hewlett Packard Enterprise dieses Bauteil zum Austausch direkt zu. CSR-Teile werden in zwei Kategorien unterteilt:

- **Zwingend—**Teile, für die das Customer Self Repair-Verfahren zwingend vorgegeben ist. Wenn Sie den Austausch dieser Teile von Hewlett Packard Enterprise vornehmen lassen, werden Ihnen die Anfahrt- und Arbeitskosten für diesen Service berechnet.
- **Optional—**Teile, für die das Customer Self Repair-Verfahren optional ist. Diese Teile sind auch für Customer Self Repair ausgelegt. Wenn Sie jedoch den Austausch dieser Teile von Hewlett Packard Enterprise vornehmen lassen möchten, können bei diesem Service je nach den für Ihr Produkt vorgesehenen Garantiebedingungen zusätzliche Kosten anfallen.

HINWEIS: Einige Hewlett Packard Enterprise Teile sind nicht für Customer Self Repair ausgelegt. Um den Garantieanspruch des Kunden zu erfüllen, muss das Teil von einem Hewlett Packard Enterprise Servicepartner ersetzt werden. Im illustrierten Teilekatalog sind diese Teile mit „No“ bzw. „Nein“ gekennzeichnet.

CSR-Teile werden abhängig von der Verfügbarkeit und vom Lieferziel am folgenden Geschäftstag geliefert. Für bestimmte Standorte ist eine Lieferung am selben Tag oder innerhalb von vier Stunden gegen einen Aufpreis verfügbar. Wenn Sie Hilfe benötigen, können Sie das Hewlett Packard Enterprise Support Center anrufen und sich von einem Mitarbeiter per Telefon helfen lassen. Den Materialien von Hewlett Packard Enterprise, die mit einem CSR-Ersatzteil geliefert werden, können Sie entnehmen, ob das defekte Teil an Hewlett Packard Enterprise zurückgeschickt werden muss. Wenn es erforderlich ist, das defekte Teil an Hewlett Packard Enterprise zurückzuschicken, müssen Sie dies innerhalb eines vorgegebenen Zeitraums tun, in der Regel innerhalb von fünf (5) Geschäftstagen. Das defekte Teil muss mit der zugehörigen Dokumentation in der Verpackung zurückgeschickt werden, die im Lieferumfang enthalten ist. Wenn Sie das defekte Teil nicht zurückschicken, kann Hewlett Packard Enterprise Ihnen das Ersatzteil in Rechnung stellen. Im Falle von Customer Self Repair kommt Hewlett Packard Enterprise für alle Kosten für die Lieferung und Rücksendung auf und bestimmt den Kurier-/Frachtdienst.

Weitere Informationen über das Hewlett Packard Enterprise Customer Self Repair Programm erhalten Sie von Ihrem Servicepartner vor Ort. Informationen über das CSR-Programm in Nordamerika finden Sie auf der Hewlett Packard Enterprise Website unter (**http://www.hpe.com/support/selfrepair**).

Reparaciones del propio cliente

Los productos de Hewlett Packard Enterprise incluyen muchos componentes que el propio usuario puede reemplazar (Customer Self Repair, CSR) para minimizar el tiempo de reparación y ofrecer una mayor flexibilidad a la hora de realizar sustituciones de componentes defectuosos. Si, durante la fase de diagnóstico, Hewlett Packard Enterprise (o los proveedores o socios de servicio de Hewlett Packard Enterprise) identifica que una reparación puede llevarse a cabo mediante el uso de un componente CSR, Hewlett Packard Enterprise le enviará dicho componente directamente para que realice su sustitución. Los componentes CSR se clasifican en dos categorías:

- **Obligatorio—**componentes cuya reparación por parte del usuario es obligatoria. Si solicita a Hewlett Packard Enterprise que realice la sustitución de estos componentes, tendrá que hacerse cargo de los gastos de desplazamiento y de mano de obra de dicho servicio.
- **Opcional—**componentes cuya reparación por parte del usuario es opcional. Estos componentes también están diseñados para que puedan ser reparados por el usuario. Sin embargo, si precisa que Hewlett Packard Enterprise realice su sustitución, puede o no conllevar costes adicionales, dependiendo del tipo de servicio de garantía correspondiente al producto.

NOTA: Algunos componentes de Hewlett Packard Enterprise no están diseñados para que puedan ser reparados por el usuario. Para que el usuario haga valer su garantía, Hewlett Packard Enterprise pone como condición que un proveedor de servicios autorizado realice la sustitución de estos componentes. Dichos componentes se identifican con la palabra "No" en el catálogo ilustrado de componentes.

Según la disponibilidad y la situación geográfica, los componentes CSR se enviarán para que lleguen a su destino al siguiente día laborable. Si la situación geográfica lo permite, se puede solicitar la entrega en el mismo día o en cuatro horas con un coste adicional. Si precisa asistencia técnica, puede llamar al Centro de asistencia técnica de Hewlett Packard Enterprise y recibirá ayuda telefónica por parte de un técnico. Con el envío de materiales para la sustitución de componentes CSR, Hewlett Packard Enterprise especificará si los componentes defectuosos deberán devolverse a Hewlett Packard Enterprise. En aquellos casos en los que sea necesario devolver algún componente a Hewlett Packard Enterprise, deberá hacerlo en el periodo de tiempo especificado, normalmente cinco días laborables. Los componentes defectuosos deberán devolverse con toda la documentación relacionada y con el embalaje de envío. Si no enviara el componente defectuoso requerido, Hewlett Packard Enterprise podrá cobrarle por el de sustitución. En el caso de todas sustituciones que lleve a cabo el cliente, Hewlett Packard Enterprise se hará cargo de todos los gastos de envío y devolución de componentes y escogerá la empresa de transporte que se utilice para dicho servicio.

Para obtener más información acerca del programa de Reparaciones del propio cliente de Hewlett Packard Enterprise, póngase en contacto con su proveedor de servicios local. Si está interesado en el programa para Norteamérica, visite la página web de Hewlett Packard Enterprise CSR (**http://www.hpe.com/support/selfrepair**).

Customer Self Repair

Veel onderdelen in Hewlett Packard Enterprise producten zijn door de klant zelf te repareren, waardoor de reparatieduur tot een minimum beperkt kan blijven en de flexibiliteit in het vervangen van defecte onderdelen groter is. Deze onderdelen worden CSR-onderdelen (Customer Self Repair) genoemd. Als Hewlett Packard Enterprise (of een Hewlett Packard Enterprise Service Partner) bij de diagnose vaststelt dat de reparatie kan worden uitgevoerd met een CSR-onderdeel, verzendt Hewlett Packard Enterprise dat onderdeel rechtstreeks naar u, zodat u het defecte onderdeel daarmee kunt vervangen. Er zijn twee categorieën CSR-onderdelen:

- **Verplicht—**Onderdelen waarvoor reparatie door de klant verplicht is. Als u Hewlett Packard Enterprise verzoekt deze onderdelen voor u te vervangen, worden u voor deze service reiskosten en arbeidsloon in rekening gebracht.
- **Optioneel—**Onderdelen waarvoor reparatie door de klant optioneel is. Ook deze onderdelen zijn ontworpen voor reparatie door de klant. Als u echter Hewlett Packard Enterprise verzoekt deze onderdelen voor u te vervangen, kunnen daarvoor extra kosten in rekening worden gebracht, afhankelijk van het type garantieservice voor het product.

OPMERKING: Sommige Hewlett Packard Enterprise onderdelen zijn niet ontwikkeld voor reparatie door de klant. In verband met de garantievoorwaarden moet het onderdeel door een geautoriseerde Service Partner worden vervangen. Deze onderdelen worden in de geïllustreerde onderdelencatalogus aangemerkt met "Nee".

Afhankelijk van de leverbaarheid en de locatie worden CSR-onderdelen verzonden voor levering op de eerstvolgende werkdag. Levering op dezelfde dag of binnen vier uur kan tegen meerkosten worden aangeboden, indien dit mogelijk is gezien de locatie. Indien assistentie is gewenst, belt u het Hewlett Packard Enterprise Support Center om via de telefoon ondersteuning van een technicus te ontvangen.

Hewlett Packard Enterprise vermeldt in de documentatie bij het vervangende CSR-onderdeel of het defecte onderdeel aan Hewlett Packard Enterprise moet worden geretourneerd. Als het defecte onderdeel aan Hewlett Packard Enterprise moet worden teruggezonden, moet u het defecte onderdeel binnen een bepaalde periode, gewoonlijk vijf (5) werkdagen, retourneren aan Hewlett Packard Enterprise. Het defecte onderdeel moet met de bijbehorende documentatie worden geretourneerd in het meegeleverde verpakkingsmateriaal. Als u het defecte onderdeel niet terugzendt, kan Hewlett Packard Enterprise u voor het vervangende onderdeel kosten in rekening brengen. Bij reparatie door de klant betaalt Hewlett Packard Enterprise alle verzendkosten voor het vervangende en geretourneerde onderdeel en kiest Hewlett Packard Enterprise zelf welke koerier/transportonderneming hiervoor wordt gebruikt.

Neem contact op met een Service Partner voor meer informatie over het Customer Self Repair programma van Hewlett Packard Enterprise. Informatie over Service Partners vindt u op de Hewlett Packard Enterprise website (**http://www.hpe.com/support/selfrepair**).

Reparo feito pelo cliente

Os produtos da Hewlett Packard Enterprise são projetados com muitas peças para reparo feito pelo cliente (CSR) de modo a minimizar o tempo de reparo e permitir maior flexibilidade na substituição de peças com defeito. Se, durante o período de diagnóstico, a Hewlett Packard Enterprise (ou fornecedores/parceiros da Hewlett Packard Enterprise) concluir que o reparo pode ser efetuado pelo uso de uma peça CSR, a Hewlett Packard Enterprise enviará a peça diretamente ao cliente. Há duas categorias de peças CSR:

- **Obrigatória**—Peças cujo reparo feito pelo cliente é obrigatório. Se desejar que a Hewlett Packard Enterprise substitua essas peças, serão cobradas as despesas de transporte e mão-de-obra do serviço.
- **Opcional**—Peças cujo reparo feito pelo cliente é opcional. Essas peças também são projetadas para o reparo feito pelo cliente. No entanto, se desejar que a Hewlett Packard Enterprise as substitua, pode haver ou não a cobrança de taxa adicional, dependendo do tipo de serviço de garantia destinado ao produto.

OBSERVAÇÃO: Algumas peças da Hewlett Packard Enterprise não são projetadas para o reparo feito pelo cliente. A fim de cumprir a garantia do cliente, a Hewlett Packard Enterprise exige que um técnico autorizado substitua a peça. Essas peças estão identificadas com a marca "No" (Não), no catálogo de peças ilustrado.

Conforme a disponibilidade e o local geográfico, as peças CSR serão enviadas no primeiro dia útil após o pedido. Onde as condições geográficas permitirem, a entrega no mesmo dia ou em quatro horas pode ser feita mediante uma taxa adicional. Se precisar de auxílio, entre em contato com o Centro de suporte técnico da Hewlett Packard Enterprise para que um técnico o ajude por telefone. A Hewlett Packard Enterprise especifica nos materiais fornecidos com a peça CSR de reposição se a peça com defeito deve ser devolvida à Hewlett Packard Enterprise. Nos casos em que isso for necessário, é preciso enviar a peça com defeito à Hewlett Packard Enterprise, você deverá enviar a peça com defeito de volta para a Hewlett Packard Enterprise dentro do período de tempo definido, normalmente em 5 (cinco) dias úteis. A peça com defeito deve ser enviada com a documentação correspondente no material de transporte fornecido. Caso não o faça, a Hewlett Packard Enterprise poderá cobrar a reposição. Para as peças de reparo feito pelo cliente, a Hewlett Packard Enterprise paga todas as despesas de transporte e de devolução da peça e determina a transportadora/serviço postal a ser utilizado.

Para obter mais informações sobre o programa de reparo feito pelo cliente da Hewlett Packard Enterprise, entre em contato com o fornecedor de serviços local. Para o programa norte-americano, visite o site da Hewlett Packard Enterprise (**http://www.hpe.com/support/selfrepair**).

カスタマーセルフリペア

修理時間を短縮し、故障部品の交換における高い柔軟性を確保するために、Hewlett Packard Enterprise製品には多数のカスタマーセルフリペア（CSR）部品があります。診断の際に、CSR部品を使用すれば修理ができるとHewlett Packard Enterprise（Hewlett Packard EnterpriseまたはHewlett Packard Enterprise正規保守代理店）が判断した場合、Hewlett Packard Enterpriseはその部品を直接、お客様に発送し、お客様に交換していただきます。CSR部品には以下の2種類があります。

- **必須** - カスタマーセルフリペアが必須の部品。当該部品について、もしもお客様がHewlett Packard Enterpriseに交換作業を依頼される場合には、その修理サービスに関する交通費および人件費がお客様に請求されます。
- **任意** - カスタマーセルフリペアが任意である部品。この部品もカスタマーセルフリペア用です。当該部品について、もしもお客様がHewlett Packard Enterpriseに交換作業を依頼される場合には、お買い上げの製品に適用される保証サービス内容の範囲内においては、別途費用を負担していただくことなく保証サービスを受けることができます。

注：Hewlett Packard Enterprise製品の一部の部品は、カスタマーセルフリペアの対象外です。製品の保証を継続するためには、Hewlett Packard EnterpriseまたはHewlett Packard Enterprise正規保守代理店による交換作業が必須となります。部品カタログには、当該部品がカスタマーセルフリペア除外品である旨が記載されています。

部品供給が可能な場合、地域によっては、CSR部品を翌営業日に届くように発送します。また、地域によっては、追加費用を負担いただくことにより同日または4時間以内に届くように発送することも可能な場合があります。サポートが必要なときは、Hewlett Packard Enterpriseの修理受付窓口に電話していただければ、技術者が電話でアドバイスします。交換用のCSR部品または同梱物には、故障部品をHewlett Packard Enterpriseに返送する必要があるかどうかが表示されています。故障部品をHewlett Packard Enterpriseに返送する必要がある場合は、指定期限内（通常は5営業日以内）に故障部品をHewlett Packard Enterpriseに返送してください。故障部品を返送する場合は、届いた時の梱包箱に関連書類とともに入れてください。故障部品を返送しない場合、Hewlett Packard Enterpriseから部品費用が請求されます。カスタマーセルフリペアの際には、Hewlett Packard Enterpriseは送料および部品返送費を全額負担し、使用する宅配便会社や運送会社を指定します。

客户自行维修

Hewlett Packard Enterprise 产品提供许多客户自行维修 (CSR) 部件，以尽可能缩短维修时间和在更换缺陷部件方面提供更大的灵活性。如果在诊断期间 Hewlett Packard Enterprise（或Hewlett Packard Enterprise 服务提供商或服务合作伙伴）确定可以通过使用 CSR 部件完成维修，Hewlett Packard Enterprise 将直接把该部件发送给您进行更换。有两类 CSR 部件：

- **强制性的** — 要求客户必须自行维修的部件。如果您请求 Hewlett Packard Enterprise 更换这些部件，则必须为该服务支付差旅费和人工费用。
- **可选的** — 客户可以选择是否自行维修的部件。这些部件也是为客户自行维修设计的。不过，如果您要求 Hewlett Packard Enterprise 为您更换这些部件，则根据为您的产品指定的保修服务类型，Hewlett Packard Enterprise 可能收取或不再收取任何附加费用。

注：某些 Hewlett Packard Enterprise 部件的设计并未考虑客户自行维修。为了满足客户保修的需要，Hewlett Packard Enterprise 要求授权服务提供商更换相关部件。这些部件在部件图解目录中标记为“否”。

CSR 部件将在下一个工作日发运（取决于备货情况和允许的地理范围）。在允许的地理范围内，可在当天或四小时内发运，但要收取额外费用。如果需要帮助，您可以致电 Hewlett Packard Enterprise 技术支持中心，将会有技术人员通过电话为您提供帮助。Hewlett Packard Enterprise 会在随更换的 CSR 部件发运的材料中指明是否必须将有缺陷的部件返还给 Hewlett Packard Enterprise。如果要求您将有缺陷的部件返还给 Hewlett Packard Enterprise，那么您必须在规定的期限内（通常是五 (5) 个工作日）将缺陷部件发给 Hewlett Packard Enterprise。有缺陷的部件必须随所提供的发运材料中的相关文件一起返还。如果未能送还有缺陷的部件，Hewlett Packard Enterprise 可能会要求您支付更换费用。客户自行维修时，Hewlett Packard Enterprise 将承担所有相关运输和部件返回费用，并指定快递商/承运商。

有关 Hewlett Packard Enterprise 客户自行维修计划的详细信息，请与您当地的服务提供商联系。有关北美地区的计划，请访问 Hewlett Packard Enterprise 网站 (http://www.hpe.com/support/selfrepair)。

客戶自行維修

Hewlett Packard Enterprise 產品設計了許多「客戶自行維修」(CSR) 的零件以減少維修時間，並且使得更換瑕疵零件時能有更大的彈性。如果在診斷期間，Hewlett Packard Enterprise (或 Hewlett Packard Enterprise 服務供應商或維修夥伴) 辨認出此項維修工作可以藉由使用 CSR 零件來完成，則 Hewlett Packard Enterprise 將直接寄送該零件給您作更換。CSR 零件分為兩種類別：

- **強制的** — 客戶自行維修所使用的零件是強制性的。如果您要求 Hewlett Packard Enterprise 更換這些零件，Hewlett Packard Enterprise 將會向您收取此服務所需的外出費用與勞動成本。
- **選購的** — 客戶自行維修所使用的零件是選購的。這些零件也設計用於客戶自行維修之用。不過，如果您要求 Hewlett Packard Enterprise 為您更換，則可能需要也可能不需要負擔額外的費用，端視針對此產品指定的保固服務類型而定。

備註：某些 Hewlett Packard Enterprise 零件沒有消費者可自行維修的設計。為符合客戶保固，Hewlett Packard Enterprise 需要授權的服務供應商更換零件。這些零件在圖示的零件目錄中，被標示為「否」。

基於材料取得及環境允許的情況下，CSR 零件將於下一個工作日以快遞寄送。在環境的允許下當天或四小時內送達，則可能需要額外的費用。若您需要協助，可致電 Hewlett Packard Enterprise 支援中心，會有一位技術人員透過電話來協助您。不論損壞的零件是否必須退回，Hewlett Packard Enterprise 皆會在與 CSR 替換零件一起運送的材料中註明。若要將損壞的零件退回 Hewlett Packard Enterprise，您必須在指定的一段時間內 (通常為五 (5) 個工作天)，將損壞的零件寄回 Hewlett Packard Enterprise。損壞的零件必須與寄送資料中隨附的相關技術文件一併退還。如果無法退還損壞的零件，Hewlett Packard Enterprise 可能要向您收取替換費用。針對客戶自行維修情形，Hewlett Packard Enterprise 將負責所有運費及零件退還費用，並指定使用何家快遞/貨運公司。

如需 Hewlett Packard Enterprise 的 CSR 方案詳細資訊，請連絡您當地的服務供應商。至於北美方案，請參閱 Hewlett Packard Enterprise 的 CSR 網站frepair (http://www.hpe.com/support/selfrepair)。

고객 셀프 수리

Hewlett Packard Enterprise 제품은 수리 시간을 최소화하고 결함이 있는 부품 교체 시 더욱 융통성을 발휘할 수 있도록 하기 위해 고객 셀프 수리(CSR) 부품을 다량 사용하여 설계되었습니다. 진단 기간 동안 Hewlett Packard Enterprise(또는 Hewlett Packard Enterprise 서비스 공급업체 또는 서비스 협력업체)에서 CSR 부품을 사용하여 수리가 가능하다고 판단되면 Hewlett Packard Enterprise는 해당 부품을 바로 사용자에게 보내어 사용자가 교체할 수 있도록 합니다. CSR 부품에는 두 가지 종류가 있습니다.

- **필수 -** 고객 셀프 수리가 의무 사항인 필수 부품. 사용자가 Hewlett Packard Enterprise에 이 부품의 교체를 요청할 경우 이 서비스에 대한 출장비 및 작업비가 청구됩니다.
- **선택 사항 -** 고객 셀프 수리가 선택 사항인 부품. 이 부품들도 고객 셀프 수리가 가능하도록 설계되었습니다. 하지만 사용자가 Hewlett Packard Enterprise에 이 부품의 교체를 요청할 경우 사용자가 구입한 제품에 해당하는 보증 서비스 유형에 따라 추가 비용 없이 교체가 가능할 수 있습니다.

참고: 일부 Hewlett Packard Enterprise 부품은 고객 셀프 수리가 불가능하도록 설계되었습니다. Hewlett Packard Enterprise는 만족스러운 고객 보증을 위해 공인 서비스 제공업체를 통해 부품을 교체하도록 하고 있습니다. 이러한 부품들은 Illustrated Parts Catalog에 "No"라고 표시되어 있습니다.

CSR 부품은 재고 상태와 지리적 조건이 허용하는 경우 다음 영업일 납품이 가능하도록 배송이 이루어집니다. 지리적 조건이 허용하는 경우 추가 비용이 청구되는 조건으로 당일 또는 4시간 배송이 가능할 수도 있습니다. 도움이 필요하시면 Hewlett Packard Enterprise Support Center로 전화하십시오. 전문 기술자가 전화로 도움을 줄 것입니다. Hewlett Packard Enterprise는 결함이 발생한 부품을 Hewlett Packard Enterprise로 반환해야 하는지 여부를 CSR 교체 부품과 함께 배송된 자료에 지정합니다. 결함이 발생한 부품을 Hewlett Packard Enterprise로 반환해야 하는 경우에는 지정된 기간 내(통상 영업일 기준 5일)에 Hewlett Packard Enterprise로 반환해야 합니다. 이때 결함이 발생한 부품은 제공된 포장 재료에 넣어 관련 설명서와 함께 반환해야 합니다. 결함이 발생한 부품을 반환하지 않는 경우 Hewlett Packard Enterprise가 교체 부품에 대해 비용을 청구할 수 있습니다. 고객 셀프 수리의 경우, Hewlett Packard Enterprise는 모든 운송 및 부품 반환 비용을 부담하며 이용할 운송업체 및 택배 서비스를 결정합니다.

Hewlett Packard Enterprise CSR 프로그램에 대한 자세한 내용은 가까운 서비스 제공업체에 문의하십시오. 북미 지역의 프로그램에 대해서는 Hewlett Packard Enterprise CSR 웹 사이트(http://www.hpe.com/support/selfrepair)를 참조하십시오.

Remote support

Remote support is available with supported devices as part of your warranty or contractual support agreement. It provides intelligent event diagnosis, and automatic, secure submission of hardware event notifications to Hewlett Packard Enterprise, which will initiate a fast and accurate resolution based on your product's service level. Hewlett Packard Enterprise strongly recommends that you register your device for remote support.

For more information and device support details, go to the Insight Remote Support website (**http://www.hpe.com/info/insightremotesupport/docs**).

Acronyms and abbreviations

ACU
Array Configuration Utility

AMP
Advanced Memory Protection

API
application program interface

ASR
Automatic Server Recovery

CSR
certificate signing request

HPE SSA
HPE Smart Storage Administrator

iLO
Integrated Lights-Out

IML
Integrated Management Log

JSON
JavaScript Object Notation

KVM
keyboard, video, and mouse

NVMe
non-volatile memory express

PCIe
Peripheral Component Interconnect Express

POST

Power-On Self-Test

RBSU

ROM-Based Setup Utility

REST

representational state transfer

SAS

serial attached SCSI

SPP

Service Pack for ProLiant

SUM

Smart Update Manager

SUV

serial, USB, video

TPM

Trusted Platform Module

UEFI

Unified Extensible Firmware Interface

USB

universal serial bus

VCA

Version Control Agent

VCRM

Version Control Repository Manager

Documentation feedback

Hewlett Packard Enterprise is committed to providing documentation that meets your needs. To help us improve the documentation, send any errors, suggestions, or comments to Documentation Feedback (**mailto:docsfeedback@hpe.com**). When submitting your feedback, include the document title, part number, edition, and publication date located on the front cover of the document. For online help content, include the product name, product version, help edition, and publication date located on the legal notices page.

Index

A

access panel, installing 16
access panel, removing 15
ACU (Array Configuration Utility) 65
Advanced ECC memory 46, 47, 48
array controllers 32
ASR (Automatic Server Recovery) 65
authorized reseller 74, 76
Automatic Server Recovery (ASR) 65

B

Basic Input/Output System (BIOS) 57, 65
battery 10, 33, 53
battery replacement notice 72
before you contact Hewlett Packard Enterprise 76
BIOS (Basic Input/Output System) 57, 65
BIOS upgrade 57, 65
blade blank 25, 28
boot options 62, 63, 64
BSMI notice 72
buttons 6

C

cables 53, 54, 55
cabling 12, 53, 54
Canadian notice 72
Care Pack 68, 76
Change Control 62, 68
compatibility 76
compliance 72
components 6
components, identification 6
configuration of system 29, 57
connectors 6
contact information 76
contacting Hewlett Packard Enterprise 76
controller 22, 32
CSR (customer self repair) 77
customer self repair (CSR) 77

D

Declaration of Conformity 72, 73
default settings 47
device mapping 26
diagnosing problems 56
diagnostic tools 57, 60, 62, 64, 65
diagnostics utility 60
DIMM baffles 16, 17
DIMM identification 46
DIMM installation guidelines 45, 46, 49
DIMM population guidelines 47, 48
DIMM slot locations 10, 12, 47
DIMM, installing 49
DIMMs 10, 12, 45, 46, 49
DIMMs, dual-rank 45
DIMMs, quad-rank 45
DIMMs, single- and dual-rank 45
direct connect SATA cable 19, 53
disposal, battery 72
documentation 87
documentation feedback 87
drive bays 6
drive cage, removing 24
drivers 67
drives 9, 30

E

electrostatic discharge 74
enclosure connector 10
environmental specifications 75
Erase Utility 57, 60
error messages 56
European Union notice 72
external cables 54

F

features 6, 65
Federal Communications Commission (FCC) notice 72
firmware 67
firmware update 61, 67
firmware upgrade utility, troubleshooting 56
firmware, updating 61, 67
firmware, upgrading 67
FlexibleLOM 20
front panel components 6, 7
front panel LEDs 7
front panel/drive cage assembly 24

G

grounding methods 74

H

hard drive backplane connector 10
hard drive bays 6

hard drive LEDs 9
hard drives, determining status of 9
hardware options 30
hardware options installation 30
health driver 65
heatsink 38
heatsink blank 38
help resources 76
Hewlett Packard Enterprise contact information 76
Hewlett Packard Enterprise Technical Support 68, 76, 84
Hewlett Packard Enterprise website 76
Hewlett Packard Enterprise, contacting 76
HPE c-Class Blade SUV Cable 6
HPE Insight Remote Support software 58, 59, 68
HPE SmartMemory 33, 45

I

iLO (Integrated Lights-Out) 57, 58
IML (Integrated Management Log) 57, 58
Insight Diagnostics 58, 60, 67
Insight Diagnostics survey functionality 60
installation, server blade 28
installation, server options 30
installing hardware 30
installing memory 49
installing server blade options 30
installing server options 30
Integrated Lights-Out (iLO) 58
Integrated Management Log (IML) 58
Intelligent Provisioning 57, 60, 62
interconnect bay numbering 26
interconnect module 25
interconnect modules, installing 25
internal USB connector 10, 66

J

Japanese notice 72

L

LEDs 9
LEDs, hard drive 9
LEDs, SAS hard drive 9
LEDs, troubleshooting 56
local KVM, accessing a server blade with 54
local media devices, accessing 55

M

M.2 SSD enablement option 37
maintenance guidelines 67
memory 12, 42, 45, 46, 47, 48
memory configurations 46, 47
memory options 42
memory subsystem architecture 45
memory, Advanced ECC 47
memory, configuration requirements 46, 48
memory, configuring 46, 47
memory, online spare 47, 48
mezzanine board connectors 10
mezzanine boards 20, 35
mezzanine card 20, 35
mezzanine connector covers 35
mezzanine connectors 10, 11
modifications, FCC notice 72

N

NIC (network interface card) 10
NVMe SSD 9, 22

O

online spare memory 47, 48
operating systems 68
operations 14
options installation 30

P

passwords 52
phone numbers 76
population guidelines, Advanced ECC 48
POST error messages 56
power fault 7
powering down 14
powering up 14
preparation procedures 14
problem diagnosis 56
processor socket 10
processors 10, 38
Product ID 64

Q

QuickSpecs 46, 53, 57

R

recovery key 52
redundant ROM 66
regulatory compliance identification numbers 56
regulatory compliance notices 72, 73
release button 6
removing the access panel 15
removing the server blade 15
resources 76
ROM redundancy 66
ROM-Based Setup Utility (RBSU) 62
ROMPaq utility 65, 66

S

safety considerations 72, 74
safety information 67, 72

SAS controller 22
SAS drives 9
scripted installation 61
serial connector 12
serial label pull tab 6, 8
serial number 64
server blade release lever 6
server features and options 30
server options, installing 30
server specifications 75
Service Pack for ProLiant 57, 60, 61
setup 25
Smart Storage Battery 33, 53
Smart Update Firmware DVD 60
Smart Update Manager 57, 61
software 57, 67, 68
software upgrades 67
specifications 75
specifications, environmental 75
specifications, server blade 75
SPP 61
static electricity 74
storage controller 22, 32
support 76
supported operating systems 68
SUV connector 6, 12, 54, 55
switches, interconnect 25
system battery 70
system board battery 10
system components 6
system configuration settings 66, 67
System Erase Utility 60
system maintenance switch 10
system, keeping current 67

T

Taiwan battery recycling notice 72
technical support 68, 76
telephone numbers 76
TPM (Trusted Platform Module) 50, 52
troubleshooting 56
troubleshooting resources 56
troubleshooting, firmware upgrade utility 56
Trusted Platform Module (TPM) 50, 52

U

Ukraine notice 73
updating the system ROM 66
USB connector 12
USB devices 54
USB support 66
utilities 57, 62, 65
utilities, deployment 57, 61

V

VCA (Version Control Agent) 67
VCRM (Version Control Repository Manager) 67
Version Control Agent (VCA) 67
Version Control Repository Manager (VCRM) 67
video connector 12
video devices 54

W

website, Hewlett Packard Enterprise 76